ABTECH
www.abtech.eu

Hazardous Area Enclosures
High Voltage Junction Boxes
Electrical Enclosures
Cable Glands and Adaptors

How to Contact Abtech

If you require any additional information regarding our products, please contact us at one of the listed locations. Alternatively, our website includes detailed product information along with the ability to download certificates, software and drawings.

Other Products Available from Abtech...

Cable Glands and Adaptors

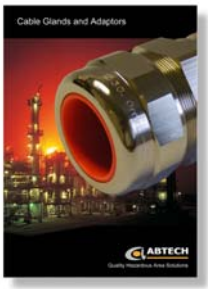

A range of cable glands, adaptors, reducers and stopping plugs manufactured from brass and suitable for use in hazardous area Zone 1 and Zone 2.

Please see the Glands Section of this catalogue on page 208.

Hazardous Area Lighting

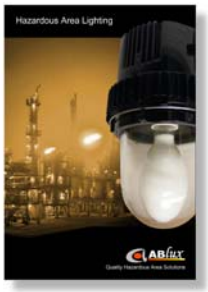

A range of hazardous area lighting products from Ablux (an Abtech Group company). The product line includes various floodlights and luminaires suitable for both Zone 1 and Zone 2 areas hazardous areas along with associated specialist lighting components. Ablux are also able to provide custom lighting solutions designed to the customer's specifications.

Worldwide Sales and Service Network

North America

▲ A.B Controls & Technology Inc.
1813 Rotary Drive
Humble
Texas
USA
TX77338

Tel: +001 281 5483424
Fax: +001 281 5483624
Email: sales@abtech-inc.com

Europe

▲ Abtech Limited
199 Newhall Road
Lower Don Valley
Sheffield,
South Yorkshire
S9 2QJ
United Kingdom
Tel: +44 (0) 114 244 2424
Fax: +44 (0) 114 243 4312
Email: sales@abtech.eu

▲ Abtech Scotland
46 Telford Road
Lenziemill
Cumbernauld
G67 2AX

▲ Abtech GmBH
Dünner Kirchweg 11
32257, Bünde, Germany
Tel: +49 (0) 522 375016
Fax: +49 (0) 522 375019
Email: sales@abtech.de

▲ Abtech Nederland BV
Glasblazerstraat 1 2984 BL
Ridderkerk,
Nederland
Tel: +31 (0) 180 428417
Fax: +31 (0) 180 431668
Email: sales@abtech.nl

Asia

▲ Abtech S.E Asia Pte Ltd
Blk 3015A Ubi Road 1
#07-13
Singapore
408705

Tel: +65 631 66413
Fax: +65 631 63243
Email: sales@abtechasia.com

▲ Abtech Korea
Astar Apt #101-2801
Dong-Rae Gu
On-Chen Dong, Busan
South Korea
Tel: +82 708807 2137
Fax: +82 51553 2137
Email: sales@abtech-korea.com

Worldwide Agents

Located in the following countries;

Belgium	UAE
Denmark	Australia
Finland	China
France	Hong Kong
Italy	Indonesia
Russia	Malaysia
Sweden	Taiwan
Oman	Thailand
Qatar	Vietnam
Saudi Arabia	Pakistan
Turkey	

www.abtech.eu

Since the first ABTECH sheet steel enclosure was manufactured in the 1970's the company has never lost sight of it's goal, to become a leading supplier of quality electrical enclosures and junction boxes suitable for both industrial and hazardous area markets. This we believe has been achieved through innovation, market leading design, rigorous testing and adherence to quality.

In recent years ABTECH have extended their range of enclosures to cope with ever increasing customer demands for unique solutions to their problems. These solutions include high current connection boxes (up to 3000Amps), high temperature junction boxes (up to 950°C for 3 hours) and IP68 enclosures (up to 120ft depth).

ABTECH rose to the challenge when the Channel Tunnel was being constructed and produced over 12,500 junction boxes and emergency lighting actuators to the most exacting of standards. With the emphasis on reliability and safety, ABTECH designed a solution that more than met the rigorous specification laid down by Eurotunnel.

The new millennium has seen ABTECH once more expanding their range of products and services to help their customers cope with the need to meet ever changing international standards.

In addition to fulfilling the requirements of the ATEX legislation, the majority of ABTECH products also comply with the IEC Ex scheme and are certified for use in Category 2 (Zone 1) and Category 3 (Zone 2) areas for both gas and dust hazards.

ABTECH operate in the global market place as the nature of the Oil & Gas & Petrochemical industry demands and to meet this requirement ABTECH operate at an International level. With the headquarters based in Sheffield, UK and factories and offices in USA, Germany, Netherlands, South Korea and Singapore and a network of agents covering over 40 countries worldwide, ABTECH have the coverage to manage any project. Indeed over the last 25 years, ABTECH have been involved in many projects throughout the world. Please refer to our Major Projects List in the Appendix section of this catalogue.

ABTECH also manufacture restricted breathing enclosures (EEx'nR') which are capable of housing sparking and hot components and are suitable for use in Zone 2 areas and can often be a cost effective alternative to flameproof enclosures (EEx'd').

The durability of our products is measured in decades. Whether the product is for an industrial or hazardous area application, ABTECH place the utmost importance on quality as would be expected from a leading manufacturer. The success of the company has been built on this dedication to total quality control and with over 30 years history of supply to the leading oil & gas companies throughout the world it is a policy that has been proven to work.

With approvals such as BS EN ISO 9001:2000, certification to British, European and International standards and approvals from certifying authorities in the UK, USA, Canada and Russia, the company's commitment to quality ensures that safety is never compromised.

Technical support at ABTECH begins long before the order is placed. Our dedicated sales staff based at our regional offices can offer advice on enclosure type, terminal selection, cable entry placement and any other requirements that might dictate the eventual selection. Technical assistance is also available at any time during the order process or indeed after the equipment is installed and ABTECH staff will be only too happy to help with any questions you may have.

The ABTECH range of products are suitable for both industrial and hazardous area applications.

Enclosures manufactured in stainless steel, mild steel, glass reinforced polyester, aluminum, polycarbonate and ABS are suitable for a wide range of industrial and OEM applications and we have the facilities to modify the standard enclosure to meet the customer's requirements.

These services include machining, painting, silk screen printing and electro-polishing. We are also able to mould any of the plastic range of enclosures in a wide range of colours (subject to minimum order quantity).

ABTECH Enclosure Calculator

One of the most difficult and time consuming steps in the selection of a suitable enclosure to meet your particular requirements is trying to calculate if the size chosen will accommodate the terminals and cable entries you require. At ABTECH we have, for many years, been using our Enclosure Calculation software which was designed specifically for use with our enclosures.

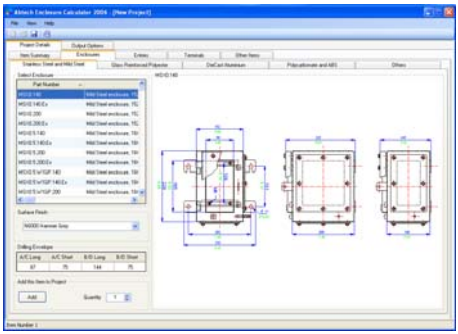

Some years ago we decided to make this program available to all our customers, free of charge, and this has been a tremendous success. The software allows users to easily design complex arrangements of entries and generates a drawing which ABTECH can subsequently use for manufacturing purposes.

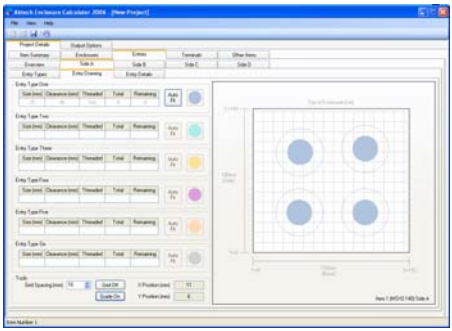

The program also incorporates a terminal calculation program which lets you see at a glance whether or not the desired number of terminals can be accommodated within your chosen enclosure and as with the Entry Calculator will print a drawing of your finished design.

The software greatly simplifies the enclosure design process. The latest version will also produce general arrangement drawings which can printed or emailed as required.

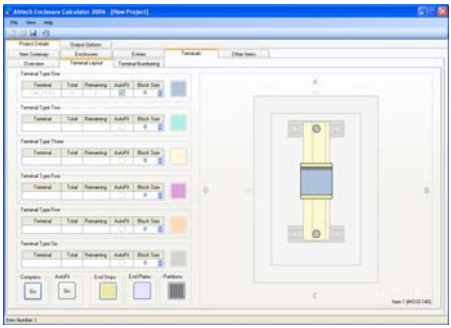

The program can be used on any Windows based PC and is simple to install and use. It includes a comprehensive help menu to allow users to start using the software immediately without the need of expert tuition. The ABTECH Enclosure Calculator CD can be obtained by contacting our sales desk or for immediate download from our website at www.abtech.eu

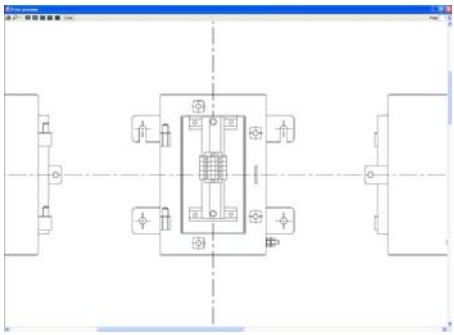

Contents

Stainless Steel and Mild Steel Enclosures 8

SX and MSX

Glass Reinforced Polyester Enclosures 42

BPG and BPGC

Assembled GRP Junction Boxes 82

BPGA

Die-Cast Aluminium Enclosures 88

ZAG and ZAGR

High Voltage Enclosures 132

MJB, DPJB, HVJB, LR and Busbar

Fire Rated Enclosures 148

SX and BPG

Polycarbonate and ABS Enclosures 152

ZP, ZPS and ZPT

Other Enclosure Products 196

GRN8, BPC/SXC Control Stations and Submersible Enclosures

Cable Glands, Adaptors and Reducers 208

ASG and AAG Glands
ABAD Adaptors
ABRE Reducers

Appendix 222

Technical Information
Gland Clearances
Abtech Project List
Index

SX

The SX range comprises 14 sizes of enclosure manufactured in either stainless steel or mild steel. 11 sizes are available in depths of 140 or 200mm and 8 sizes are available in depths of 140, 200 or 300mm. The majority of the range can be fitted with removable gland plates on any or all of the four sides. The SX Range is available with a number of paint options (most RAL colours are available) and anti-corrosion finishes. Further advice on surface finishes can be sought from the ABTECH sales office.

The stainless steel range (SSX) is manufactured in 316 grade stainless steel to give the maximum environmental protection.
The main body is manufactured from 2mm thick sheet and the mounting straps and gland plates from 3mm thick plate. Cable entries can be drilled in the enclosure door or sides or through the gland plates, if fitted. Entries may also be drilled through the rear face of the enclosure (EEx'e' versions also.)

Another important feature of the SX range is the hinged, lift-off door, which is held to the enclosure by at least 4 captive stainless steel screws, which also maintain the correct compression on the gasket. The hinges are solid block, machined oversize to enable the screws to control the closing of the door, not the hinge, its only function being to support the door when opened. The hinges allow easy removal of the door with only minimal opening required before removal (less than 10°).

Earthing is accomplished by means of an internal /external earth stud fitted as standard which can be connected to the terminal mounting rail or component mounting plate.
Optionally, earth studs can be fitted to the door and gland plates. Rail mounted earth terminals or proprietary earth bars can be fitted inside the enclosure and ABTECH Sales staff will be happy to advise on this. The SX range is suitable for a wide range of ambient conditions. Hazardous Area certified enclosures are suitable for -50°C to + 175°C. Non-Ex versions are suitable from -60°C to + 200°C.

The SX range of enclosures are suitable for use in hazardous areas and can be supplied with a number of certificates. ATEX EEx'e' to BS EN 50019 (Zone 1 & 2) EEx'nA' to BS EN50021 (Zone 2), NEMA 4X (CSA, UL & FM class 1, div 2), IEC Ex and GOST. The range can be supplied fitted with any component approved terminal to apparatus level or can be supplied empty as component approved for the clients own certification requirements.

The SX range was specifically designed to meet the rigours of the North Sea environment and is capable of achieving IP66 and IP67. It has also undergone and passed the Shell/ERA deluge test which was devised to adequately test enclosures and electrical equipment which is routinely subjected to ships deck conditions or fire deluge systems.

IP68 enclosures are also available for depths up to 120 ft to special order. Further information on submersible enclosures is available in Section 8 of this catalogue.

The SX range has many features which lend itself to a wide variety applications, not least of which is the ability to be constructed to almost any dimension due to its fabricated nature. This can also be applied to EEx'e' enclosures where the certification allows oversize enclosures to be manufactured whilst retaining the next smallest sized enclosure's power rating.

The SX range is also suitable for fire resistance applications and when fitted with ceramic terminals meets the requirements of IEC 331 (750°C (1382°F) for 3 hours) and also BS6387/1983 (950°C (1742°F) for 3 hours). Further details are available in Section 6 of this catalogue.

Other applications include junction boxes, both industrial and hazardous area, OEM applications, fire protection systems, tunnel wiring, IP68 applications, etc.

Abtech also offers bespoke solutions for Ex nR restricted breathing applications.

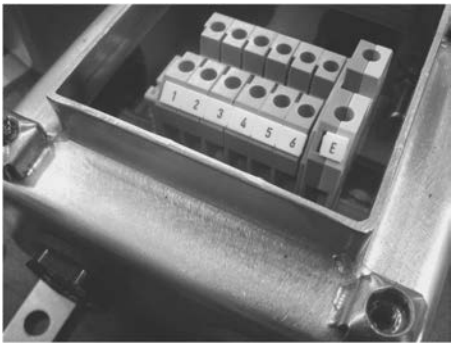

SX Range Features

- Wide Operating Temperature (- 50°C to + 175°C) (-58°F to +347°F)
- Ingress Protection up to IP68
- Fire Resistant to IEC331
- Impact Resistant > 10 Nm
- Corrosion Resistant
- Gland plates can be fitted to any or all four sides (size SX66 and above)
- Certification for use in Zone 1 and 2
- UL, CSA, IEC Ex, ATEX, FM, InMetro and TR CU Approvals
- Ideal for Petrochemical and Marine applications

Certification and Coding

	Zone 0	Zone 20	Zone 1	Zone 21	Zone 2	Zone 22
Ex e			•	•	•	•
Ex ai	•	•	•	•	•	•
Ex ab			•	•	•	•
Ex op is	•	•	•	•	•	•
Ex nA					•	•
Ex nR					•	•

Available with Apparatus or Component certification

Accessories and Options

The following table is a list of the available accessories suitable for particular standard sizes of SX enclosures. Care should be taken when ordering accessories for use with enclosures intended for hazardous areas to ensure that compliance with certification is retained.

Part Number (see note 1)	Width (mm) (see note 2)	Height (mm) (see note 2)	Depth (mm) (see note 2)	140mm Depth	200mm Depth	300mm Depth	Gland Plates (on any or all four sides)	EP – Electro-polished external surfaces (SX only)	LB - Label Bracket Welded to Door	ES - Earth Stud fitted to Door and Gland Plates	EB - Internal Earthing Bar	BD - Breather Drain (see note 3)	TP - Tamper Proof Lid Fixing Screws	MP - Component Mounting Plate (Steel /Stainless Steel)	RF – RFI Protection (see note 4)
SX45	114	114	51					●	●			●	●	●	●
SX64	102	152	63					●	●			●	●	●	●
SX66	152	152	102				●	●	●	●	●	●	●	●	●
SX0	152	229		●	●		●	●	●	●	●	●	●	●	●
SX0.5	184	274		●	●		●	●	●	●	●	●	●	●	●
SX1	234	324		●	●		●	●	●	●	●	●	●	●	●
SX1.5	306	306		●	●	●	●	●	●	●	●	●	●	●	●
SX2	372	324		●	●	●	●	●	●	●	●	●	●	●	●
SX3	372	448		●	●	●	●	●	●	●	●	●	●	●	●
SX4	372	510		●	●	●	●	●	●	●	●	●	●	●	●
SX5	510	510		●	●	●	●	●	●	●	●	●	●	●	●
SX6	510	780		●	●	●	●	●	●	●	●	●	●	●	●
SX7	650	950		●	●	●	●	●	●	●	●	●	●	●	●
SX8	800	1250		●	●	●	●	●	●	●	●	●	●	●	●

Ordering Example;

SX1.5 300 4GP LB EB

(Stainless Steel SX1.5 300mm deep, 4 gland plates, label bracket on door and internal earthing bar)

1. The range is available either in stainless steel 316 (SX variants) or mild steel (MSX variants).
2. Manufacturing tolerances are +/- 3mm on overall dimensions and +/-0.5mm on fixing hole centres.
3. Breather drain available in IP66 stainless steel or plastic.
4. Radio Frequency Interference (RFI) gasket may reduce IP rating.

Full width, full height Gland Plates
(can be fitted to any or all sides)

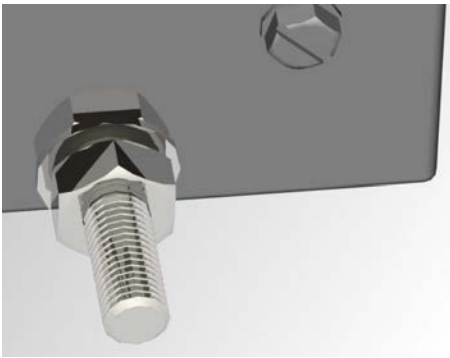

Earth Stud fitted to door and gland plates

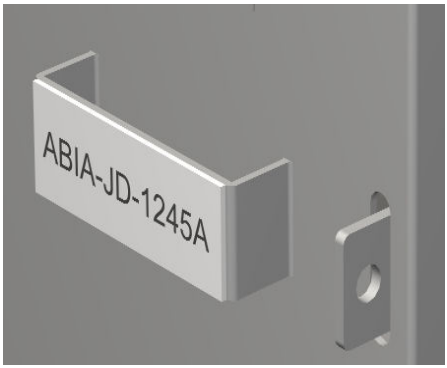

Label Bracket
(welded to door)

Electro-polished
(external surfaces on SX range only)

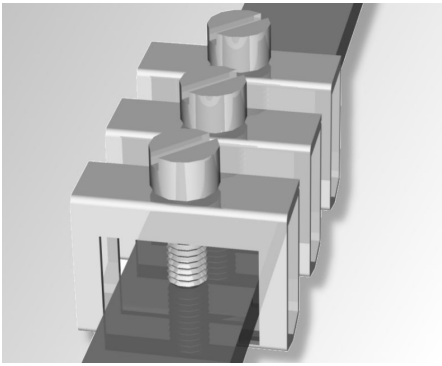

Internal Earthing bar
(can be fitted with clamps)

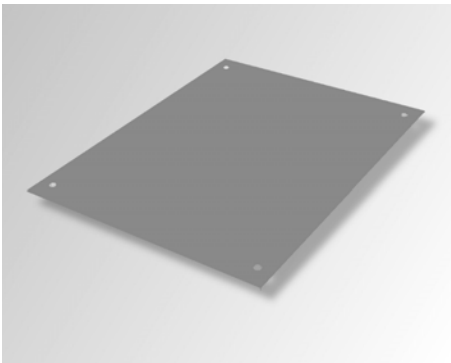

Component Mounting Plate
(steel or stainless steel 316)

SX45 / MSX45

Stainless Steel and Mild Steel Enclosures

IP66/7

Application
Hazardous and Industrial areas

Protection Degree
IP66 or 67

Certification
ATEX & IECEx (Zone 0, 1 & 2; Zone 20, 21 & 22)
CSA Ex e (Class 1 Zone 1 & Zone 2)
FM AEx e(Class 1 Zone 1 & Zone 2)
TR CU Ex e (Zone 1 & Zone 2)
NEMA 4X (CSA, UL & FM)
Class 1 Division 2

Material
Stainless steel 316 (1.4404) or Mild steel

Temperature Rating
Hazardous Area: -50°C to +175°C
Non Hazardous: -60°C to +200°C

Power Rating
8.00W

Terminal Populations (Maximum Number of Rails = 1)

Calculations do not include the use of end stops, end plates and separators. Check that the enclosure can accommodate the cable bending radius and that the earth stud and entry location will permit the required number of terminals to be fitted

Weidmuller	
SAK 2.5	7
SAK 4	7
SAK 6	0
SAK 10	0
SAK 16	0
SAK 35	0
SAK 70	0
WDU 2.5	0
WDU 4	0
WDU 6	0
WDU 10	0
WDU 16	0

Phoenix	
UK 2.5 N	9
UK 3 N	9
UK 5 N	7
UK 10 N	4
UK 16 N	3
UK 35 N	0

Wago	
280-992	8
280-999	0
281-691	7
281-992	7
281-993	0
282-691	0
284-691	0
283-691	0
285-691	0
280-998	8
281-998	0
264-120	7
264-220	4
264-132(2)	1
264-134(4)	1
262-132(2)	1
264-134(4)	1

Drilling Envelope Dimensions (mm)

	Side A - C	Side B - D
Width	114	114
Height	51	51

Gland Entry Matrix *

Size	Side A - C	Side B - D
M16	4	4
M20	2	2
M25	2	2
M32	0	0
M40	0	0

* Using standard gland clearances

Specifications

Part Number	Material	Width (mm)	Length (mm)	Depth (mm)	Weight (g)
SX45	Stainless Steel	114	114	51	1200
MSX45	Mild Steel	114	114	51	1200

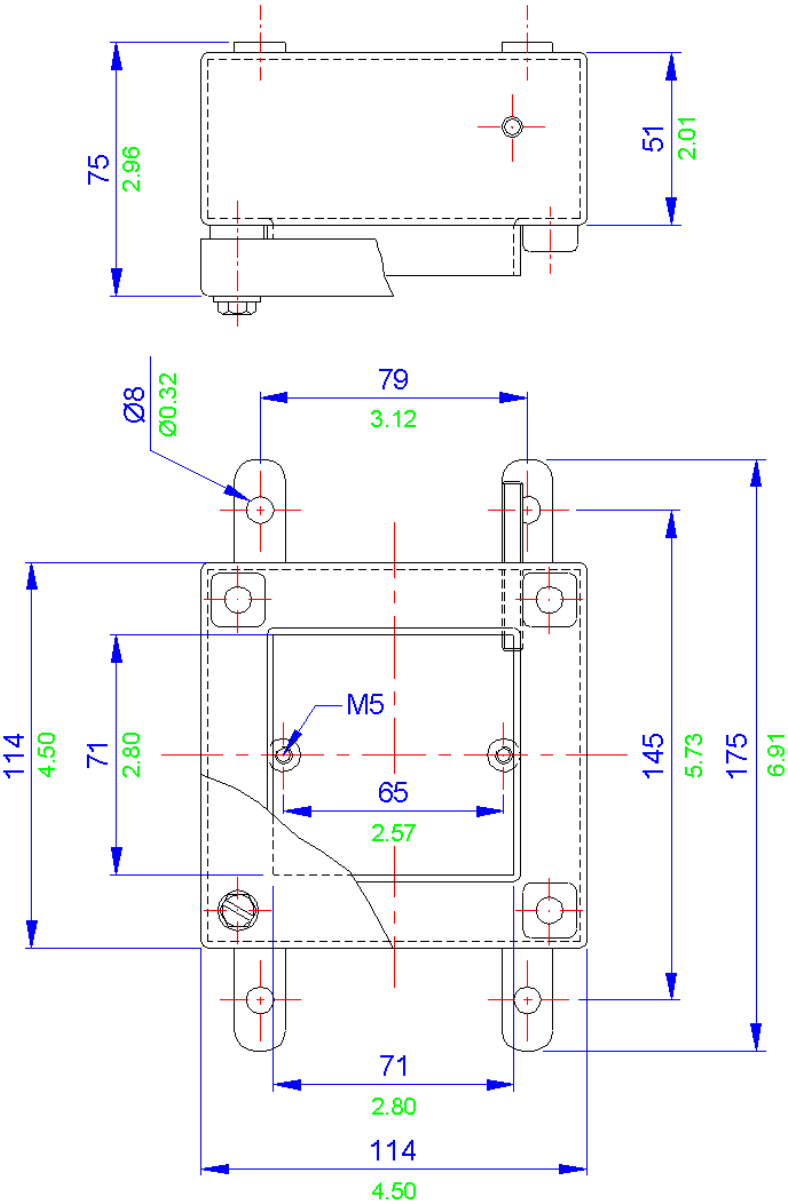

All **blue** dimensions in mm, all **green** dimensions in decimal inches (drawing not to scale)

SX64 / MSX64

Stainless Steel and Mild Steel Enclosures

IP66/7

Application
Hazardous and Industrial areas

Protection Degree
IP66 or 67

Certification
ATEX & IECEx (Zone 0, 1 & 2; Zone 20, 21 & 22)
CSA Ex e (Class 1 Zone 1 & Zone 2)
FM AEx e(Class 1 Zone 1 & Zone 2)
TR CU Ex e (Zone 1 & Zone 2)
NEMA 4X (CSA, UL & FM)
Class 1 Division 2

Material
Stainless steel 316 (1.4404) or Mild steel

Temperature Rating
Hazardous Area: -50°C to +175°C
Non Hazardous: -60°C to +200°C

Power Rating
10.258W

Terminal Populations (Maximum Number of Rails = 1)

Calculations do not include the use of end stops, end plates and separators. Check that the enclosure can accommodate the cable bending radius and that the earth stud and entry location will permit the required number of terminals to be fitted

Weidmuller	
SAK 2.5	15
SAK 4	15
SAK 6	11
SAK 10	9
SAK 16	0
SAK 35	0
SAK 70	0
WDU 2.5	0
WDU 4	0
WDU 6	0
WDU 10	0
WDU 16	0

Phoenix	
UK 2.5 N	17
UK 3 N	17
UK 5 N	15
UK 10 N	9
UK 16 N	7
UK 35 N	0

Wago	
280-992	18
280-999	0
281-691	15
281-992	15
281-993	0
282-691	0
284-691	0
283-691	0
285-691	0
280-998	18
281-998	15
264-120	15
264-220	9
264-132(2)	3
264-134(4)	2
262-132(2)	3
264-134(4)	2

Drilling Envelope Dimensions (mm)

	Side A - C	Side B - D
Width	102	152
Height	63	63

Gland Entry Matrix *

Size	Side A - C	Side B - D
M16	6	8
M20	3	4
M25	2	3
M32	1	2
M40	0	0

* Using standard gland clearances

Specifications

Part Number	Material	Width (mm)	Length (mm)	Depth (mm)	Weight (g)
SX64	Stainless Steel	102	152	63	1500
MSX64	Mild Steel	102	152	63	1500

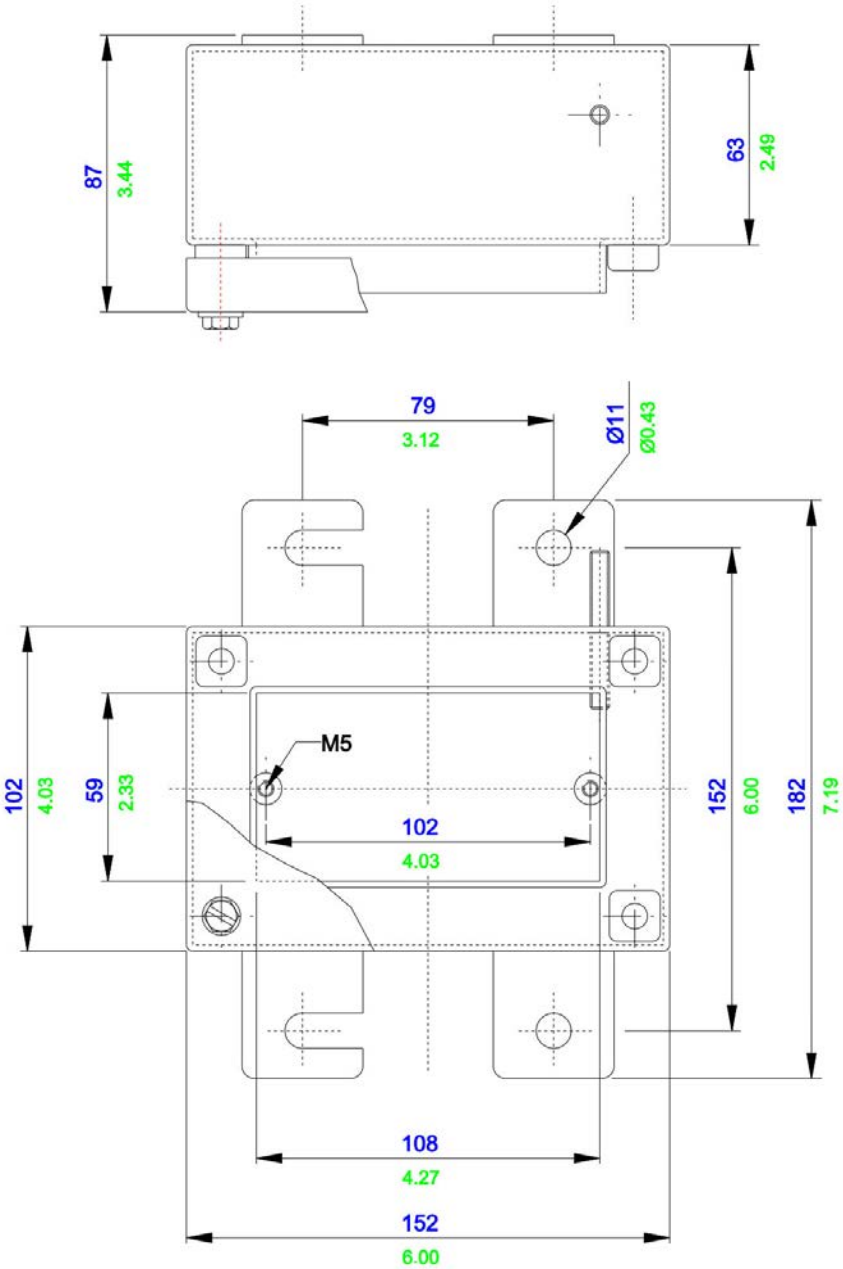

All **blue** dimensions in mm, all **green** dimensions in decimal inches (drawing not to scale)

SX66 / MSX66

Stainless Steel and Mild Steel Enclosures

IP66/7

Application
Hazardous and Industrial areas

Protection Degree
IP66 or 67

Certification
ATEX & IECEx (Zone 0, 1 & 2; Zone 20, 21 & 22)
CSA Ex e (Class 1 Zone 1 & Zone 2)
FM AEx e(Class 1 Zone 1 & Zone 2)
TR CU Ex e (Zone 1 & Zone 2)
NEMA 4X (CSA, UL & FM)
Class 1 Division 2

Material
Stainless steel 316 (1.4404) or Mild steel

Temperature Rating
Hazardous Area: -50°C to +175°C
Non Hazardous: -60°C to +200°C

Power Rating
14.287W

Terminal Populations (Maximum Number of Rails = 1)

Calculations do not include the use of end stops, end plates and separators. Check that the enclosure can accommodate the cable bending radius and that the earth stud and entry location will permit the required number of terminals to be fitted

Weidmuller	
SAK 2.5	15
SAK 4	15
SAK 6	11
SAK 10	9
SAK 16	7
SAK 35	6
SAK 70	0
WDU 2.5	17
WDU 4	15
WDU 6	11
WDU 10	9
WDU 16	7

Phoenix	
UK 2.5 N	17
UK 3 N	17
UK 5 N	14
UK 10 N	9
UK 16 N	7
UK 35 N	6

Wago	
280-992	18
280-999	18
281-691	15
281-992	15
281-993	15
282-691	11
284-691	10
283-691	7
285-691	0
280-998	18
281-998	15
264-120	16
264-220	10
264-132(2)	3
264-134(4)	2
262-132(2)	3
264-134(4)	2

Drilling Envelope Dimensions (mm)

	Side A - C	Side B - D
Width	152	152
Height	102	102

Gland Entry Matrix *

Size	Side A - C	Side B - D
M16	4	4
M20	2	2
M25	2	2
M32	0	0
M40	0	0

* Using standard gland clearances

Specifications

Part Number	Material	Width (mm)	Length (mm)	Depth (mm)	Weight (g)
SX66	Stainless Steel	152	152	102	2200
MSX66	Mild Steel	152	152	102	2200

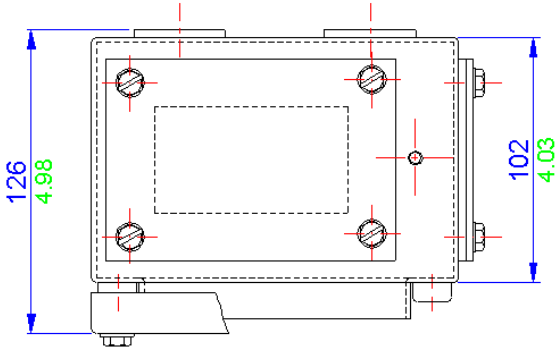

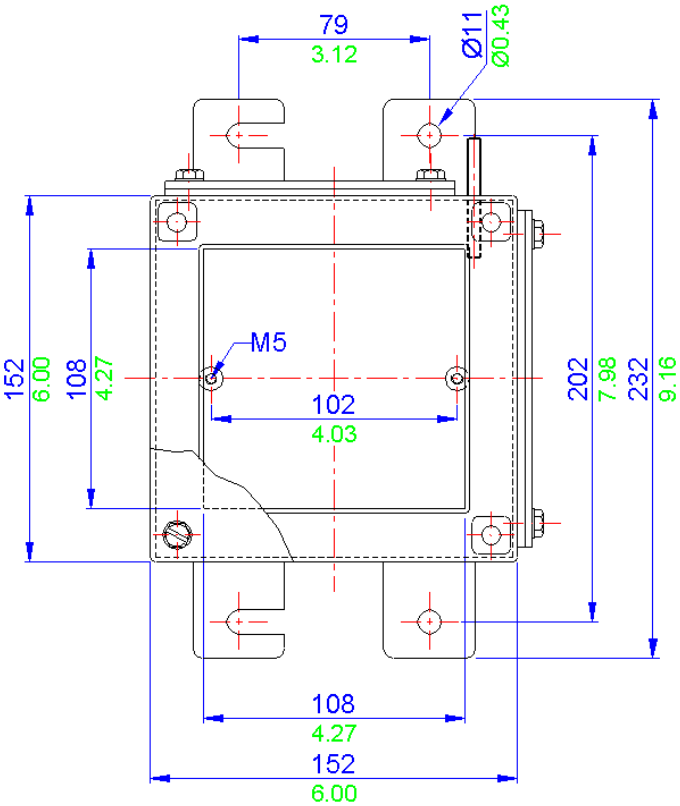

All **blue** dimensions in mm, all **green** dimensions in decimal inches (drawing not to scale)

SX0 / MSX0

Stainless Steel and Mild Steel Enclosures

IP66/7

Application
Hazardous and Industrial areas

Protection Degree
IP66 or 67

Certification
ATEX & IECEx (Zone 0, 1 & 2; Zone 20, 21 & 22)
CSA Ex e (Class 1 Zone 1 & Zone 2)
FM AEx e(Class 1 Zone 1 & Zone 2)
TR CU Ex e (Zone 1 & Zone 2)
NEMA 4X (CSA, UL & FM)
Class 1 Division 2

Material
Stainless steel 316 (1.4404) or Mild steel

Temperature Rating
Hazardous Area: -50°C to +175°C
Non Hazardous: -60°C to +200°C

Power Rating
19.874W

Terminal Populations (Maximum Number of Rails = 1)

Calculations do not include the use of end stops, end plates and separators. Check that the enclosure can accommodate the cable bending radius and that the earth stud and entry location will permit the required number of terminals to be fitted

Weidmuller	
SAK 2.5	21
SAK 4	19
SAK 6	16
SAK 10	12
SAK 16	10
SAK 35	7
SAK 70	5
WDU 2.5	25
WDU 4	21
WDU 6	16
WDU 10	12
WDU 16	10

Phoenix	
UK 2.5 N	25
UK 3 N	25
UK 5 N	21
UK 10 N	12
UK 16 N	10
UK 35 N	8

Wago	
280-992	24
280-999	24
281-691	20
281-992	20
281-993	20
282-691	15
284-691	12
283-691	0
285-691	0
280-998	24
281-998	20
264-120	21
264-220	12
264-132(2)	4
264-134(4)	3
262-132(2)	4
264-134(4)	3

Drilling Envelope Dimensions (mm)

	Side A - C		Side B - D	
	140	200	140	200
Width	87	87	144	144
Height	75	135	75	135

* With glandplate fitted

Gland Entry Matrix *

Size	Side A - C		Side B - D	
	140	200	140	200
M16	4	9	8	16
M20	2	6	6	9
M25	1	4	3	6
M32	1	2	2	4
M40	1	1	2	2

* Using standard gland clearances

Specifications

Part Number	Material	Width (mm)	Length (mm)	Depth (mm)	Weight (g)
SX0.140	Stainless Steel	152	229	140	3200
SX0.200	Stainless Steel	152	229	200	4000
MSX0.140	Mild Steel	152	229	140	3200
MSX0.200	Mild Steel	152	229	200	4000

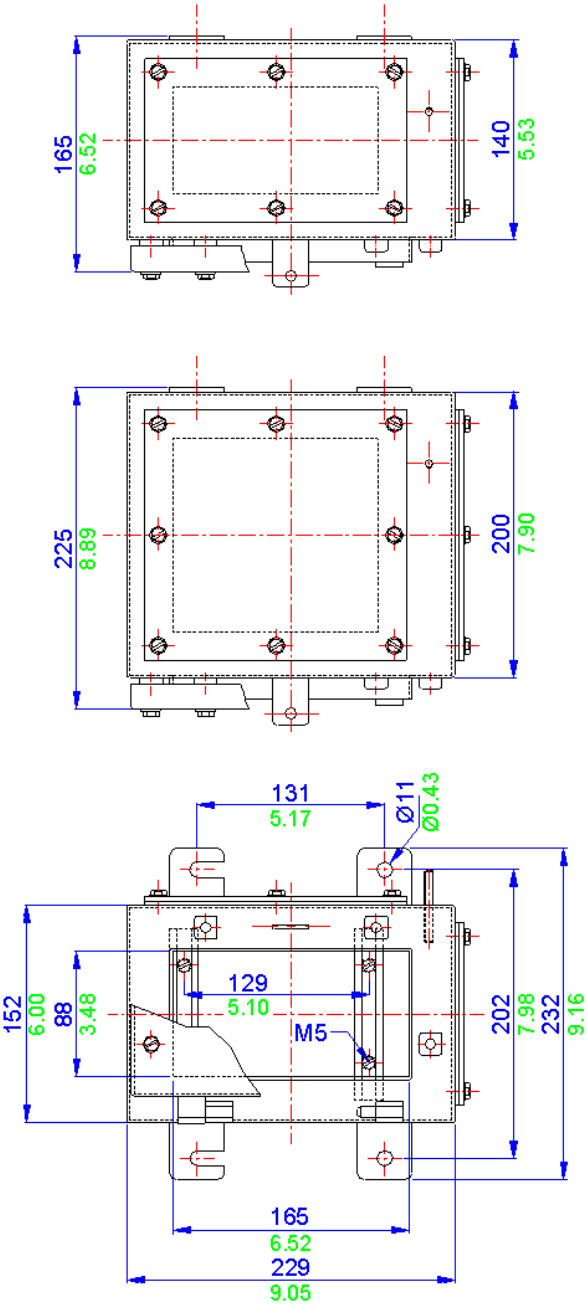

All **blue** dimensions in mm, all **green** dimensions in decimal inches (drawing not to scale)

SX0.5 / MSX0.5

Stainless Steel and Mild Steel Enclosures

IP66/7

Application
Hazardous and Industrial areas

Protection Degree
IP66 or 67

Certification
ATEX & IECEx (Zone 0, 1 & 2; Zone 20, 21 & 22)
CSA Ex e (Class 1 Zone 1 & Zone 2)
FM AEx e(Class 1 Zone 1 & Zone 2)
TR CU Ex e (Zone 1 & Zone 2)
NEMA 4X (CSA, UL & FM)
Class 1 Division 2

Material
Stainless steel 316 (1.4404) or Mild steel

Temperature Rating
Hazardous Area: -50°C to +175°C
Non Hazardous: -60°C to +200°C

Power Rating
19.874W

Terminal Populations (Maximum Number of Rails = 2)

Calculations do not include the use of end stops, end plates and separators. Check that the enclosure can accommodate the cable bending radius and that the earth stud and entry location will permit the required number of terminals to be fitted

Weidmuller	
SAK 2.5	56
SAK 4	52
SAK 6	42
SAK 10	34
SAK 16	14
SAK 35	10
SAK 70	7
WDU 2.5	67
WDU 4	56
WDU 6	42
WDU 10	34
WDU 16	14

Phoenix	
UK 2.5 N	68
UK 3 N	68
UK 5 N	56
UK 10 N	34
UK 16 N	14
UK 35 N	11

Wago	
280-992	31
280-999	31
281-691	27
281-992	27
281-993	27
282-691	21
284-691	16
283-691	28
285-691	0
280-998	31
281-998	27
264-120	56
264-220	32
264-132(2)	12
264-134(4)	8
262-132(2)	12
264-134(4)	8

Drilling Envelope Dimensions (mm)

	Side A - C		Side B - D	
	140	200	140	200
Width	119	119	189	189
Height	75	135	75	135

* With glandplate fitted

Gland Entry Matrix *

Size	Side A - C		Side B - D	
	140	200	140	200
M16	6	12	10	20
M20	4	9	8	12
M25	2	6	4	9
M32	2	4	3	6
M40	1	2	2	4

* Using standard gland clearances

Specifications

Part Number	Material	Width (mm)	Length (mm)	Depth (mm)	Weight (g)
SX0.5.140	Stainless Steel	184	274	140	5000
SX0.5.200	Stainless Steel	184	274	200	6000
MSX0.5.140	Mild Steel	184	274	140	5000
MSX0.5.200	Mild Steel	184	274	200	6000

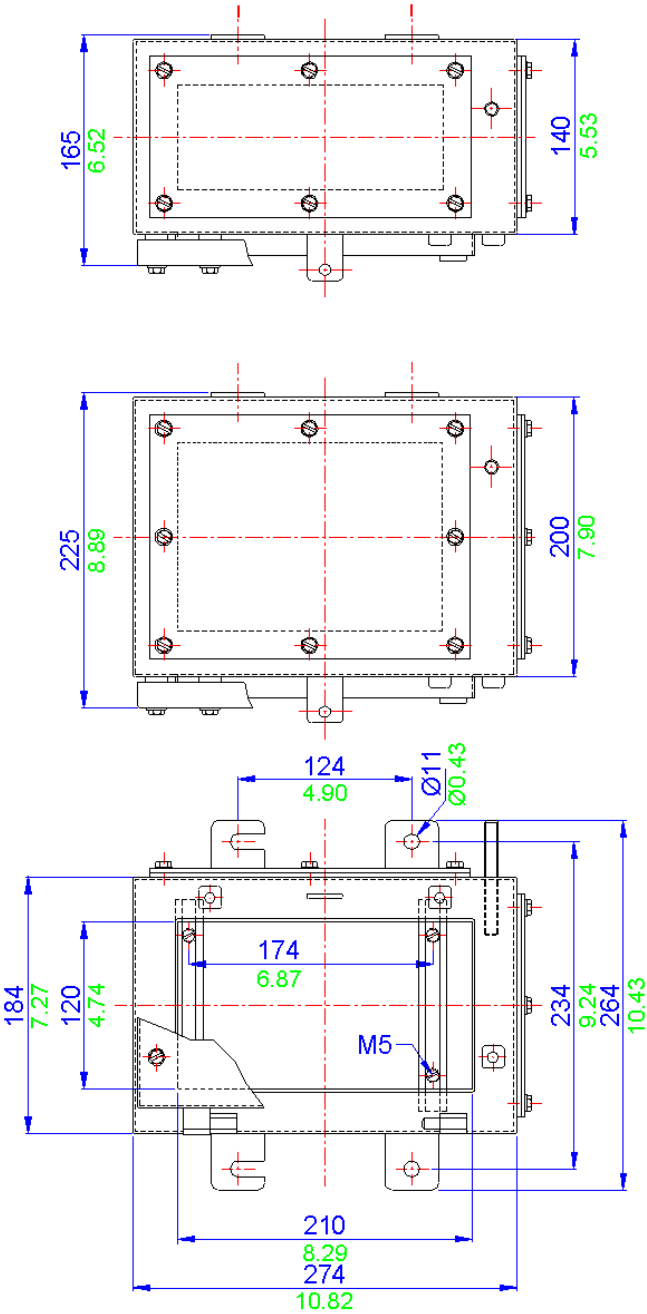

All **blue** dimensions in mm, all **green** dimensions in decimal inches (drawing not to scale)

SX1 / MSX1

Stainless Steel and Mild Steel Enclosures

IP66/7

Application
Hazardous and Industrial areas

Protection Degree
IP66 or 67

Certification
ATEX & IECEx (Zone 0, 1 & 2; Zone 20, 21 & 22)
CSA Ex e (Class 1 Zone 1 & Zone 2)
FM AEx e(Class 1 Zone 1 & Zone 2)
TR CU Ex e (Zone 1 & Zone 2)
NEMA 4X (CSA, UL & FM)
Class 1 Division 2

Material
Stainless steel 316 (1.4404) or Mild steel

Temperature Rating
Hazardous Area: -50°C to +175°C
Non Hazardous: -60°C to +200°C

Power Rating
29.206W

Terminal Populations (Maximum Number of Rails = 2)

Calculations do not include the use of end stops, end plates and separators. Check that the enclosure can accommodate the cable bending radius and that the earth stud and entry location will permit the required number of terminals to be fitted

Weidmuller	
SAK 2.5	72
SAK 4	66
SAK 6	54
SAK 10	44
SAK 16	18
SAK 35	14
SAK 70	10
WDU 2.5	86
WDU 4	72
WDU 6	54
WDU 10	44
WDU 16	18

Phoenix	
UK 2.5 N	86
UK 3 N	86
UK 5 N	72
UK 10 N	44
UK 16 N	18
UK 35 N	14

Wago	
280-992	41
280-999	41
281-691	34
281-992	34
281-993	34
282-691	27
284-691	21
283-691	18
285-691	12
280-998	41
281-998	34
264-120	72
264-220	42
264-132(2)	14
264-134(4)	10
262-132(2)	14
264-134(4)	10

Drilling Envelope Dimensions (mm)

	Side A - C		Side B - D	
	140	200	140	200
Width	169	169	239	239
Height	75	135	75	135

* With glandplate fitted

Gland Entry Matrix *

Size	Side A - C		Side B - D	
	140	200	140	200
M16	10	20	14	28
M20	6	12	10	18
M25	3	9	5	12
M32	2	4	4	8
M40	2	2	3	6

* Using standard gland clearances

Specifications

Part Number	Material	Width (mm)	Length (mm)	Depth (mm)	Weight (g)
SX1.140	Stainless Steel	234	324	140	6300
SX1.200	Stainless Steel	234	324	200	7200
MSX1.140	Mild Steel	234	324	140	6300
MSX1.200	Mild Steel	234	324	200	7200

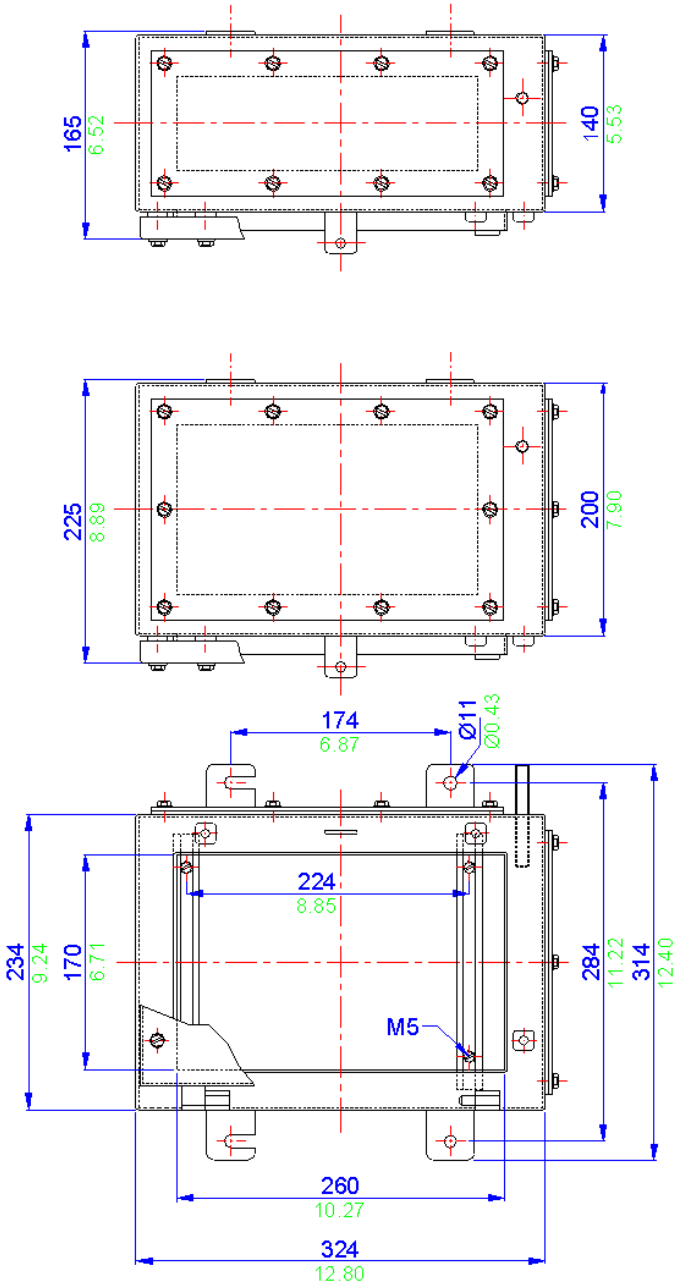

All **blue** dimensions in mm, all **green** dimensions in decimal inches (drawing not to scale)

SX1.5 / MSX1.5

Stainless Steel and Mild Steel Enclosures

IP66/7

Application
Hazardous and Industrial areas

Protection Degree
IP66 or 67

Certification
ATEX & IECEx (Zone 0, 1 & 2; Zone 20, 21 & 22)
CSA Ex e (Class 1 Zone 1 & Zone 2)
FM AEx e(Class 1 Zone 1 & Zone 2)
TR CU Ex e (Zone 1 & Zone 2)
NEMA 4X (CSA, UL & FM)
Class 1 Division 2

Material
Stainless steel 316 (1.4404) or Mild steel

Temperature Rating
Hazardous Area: -50°C to +175°C
Non Hazardous: -60°C to +200°C

Power Rating
32.284W

Terminal Populations (Maximum Number of Rails = 3)

Calculations do not include the use of end stops, end plates and separators. Check that the enclosure can accommodate the cable bending radius and that the earth stud and entry location will permit the required number of terminals to be fitted

Weidmuller	
SAK 2.5	99
SAK 4	93
SAK 6	75
SAK 10	60
SAK 16	34
SAK 35	24
SAK 70	20
WDU 2.5	118
WDU 4	99
WDU 6	75
WDU 10	60
WDU 16	34

Phoenix	
UK 2.5 N	120
UK 3 N	120
UK 5 N	99
UK 10 N	60
UK 16 N	34
UK 35 N	26

Wago	
280-992	74
280-999	74
281-691	64
281-992	64
281-993	64
282-691	48
284-691	38
283-691	32
285-691	11
280-998	74
281-998	64
264-120	99
264-220	60
264-132(2)	21
264-134(4)	15
262-132(2)	21
264-134(4)	15

Drilling Envelope Dimensions (mm)

	Side A - C		Side B - D	
	140	200	140	200
Width	241	241	221	221
Height	75	135	75	135

* With glandplate fitted

Gland Entry Matrix *

Size	Side A - C		Side B - D	
	140	200	140	200
M16	14	28	12	25
M20	10	18	10	16
M25	5	12	4	12
M32	4	8	3	6
M40	3	6	3	4

* Using standard gland clearances

Specifications

Part Number	Material	Width (mm)	Length (mm)	Depth (mm)	Weight (g)
SX1.5.140	Stainless Steel	306	306	140	7300
SX1.5.200	Stainless Steel	306	306	200	8800
SX1.5.300	Stainless Steel	306	306	300	11300
MSX1.5.140	Mild Steel	306	306	140	7300
MSX1.5.200	Mild Steel	306	306	200	8800
MSX1.5.300	Mild Steel	306	306	300	11300

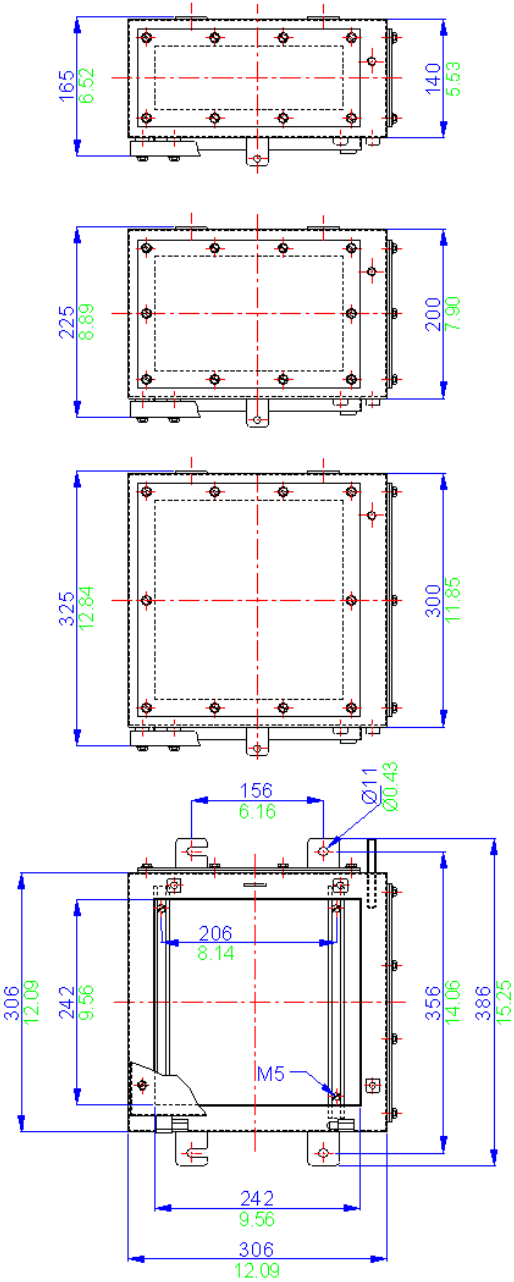

All **blue** dimensions in mm, all **green** dimensions in decimal inches (drawing not to scale)

SX2 / MSX2

Stainless Steel and Mild Steel Enclosures

IP66/7

Application
Hazardous and Industrial areas

Protection Degree
IP66 or 67

Certification
ATEX & IECEx (Zone 0, 1 & 2; Zone 20, 21 & 22)
CSA Ex e (Class 1 Zone 1 & Zone 2)
FM AEx e(Class 1 Zone 1 & Zone 2)
TR CU Ex e (Zone 1 & Zone 2)
NEMA 4X (CSA, UL & FM)
Class 1 Division 2

Material
Stainless steel 316 (1.4404) or Mild steel

Temperature Rating
Hazardous Area: -50°C to +175°C
Non Hazardous: -60°C to +200°C

Power Rating
36.500W

Terminal Populations (Maximum Number of Rails = 3)

Calculations do not include the use of end stops, end plates and separators. Check that the enclosure can accommodate the cable bending radius and that the earth stud and entry location will permit the required number of terminals to be fitted

Weidmuller	
SAK 2.5	132
SAK 4	123
SAK 6	99
SAK 10	78
SAK 16	66
SAK 35	42
SAK 70	24
WDU 2.5	129
WDU 4	132
WDU 6	99
WDU 10	78
WDU 16	66

Phoenix	
UK 2.5 N	156
UK 3 N	156
UK 5 N	132
UK 10 N	78
UK 16 N	66
UK 35 N	54

Wago	
280-992	150
280-999	150
281-691	126
281-992	126
281-993	84
282-691	99
284-691	78
283-691	44
285-691	30
280-998	150
281-998	126
264-120	132
264-220	78
264-132(2)	27
264-134(4)	18
262-132(2)	27
264-134(4)	18

Drilling Envelope Dimensions (mm)

	Side A - C		Side B - D	
	140	200	140	200
Width	307	307	239	239
Height	75	135	75	135

* With glandplate fitted

Gland Entry Matrix *

Size	Side A - C		Side B - D	
	140	200	140	200
M16	18	36	14	28
M20	14	24	10	18
M25	6	18	6	12
M32	5	10	4	8
M40	4	8	3	6

* Using standard gland clearances

Specifications

Part Number	Material	Width (mm)	Length (mm)	Depth (mm)	Weight (g)
SX2.140	Stainless Steel	372	324	140	9500
SX2.200	Stainless Steel	372	324	200	11300
SX2.300	Stainless Steel	372	324	300	14300
MSX2.140	Mild Steel	372	324	140	9500
MSX2.200	Mild Steel	372	324	200	11300
MSX2.300	Mild Steel	372	324	300	14300

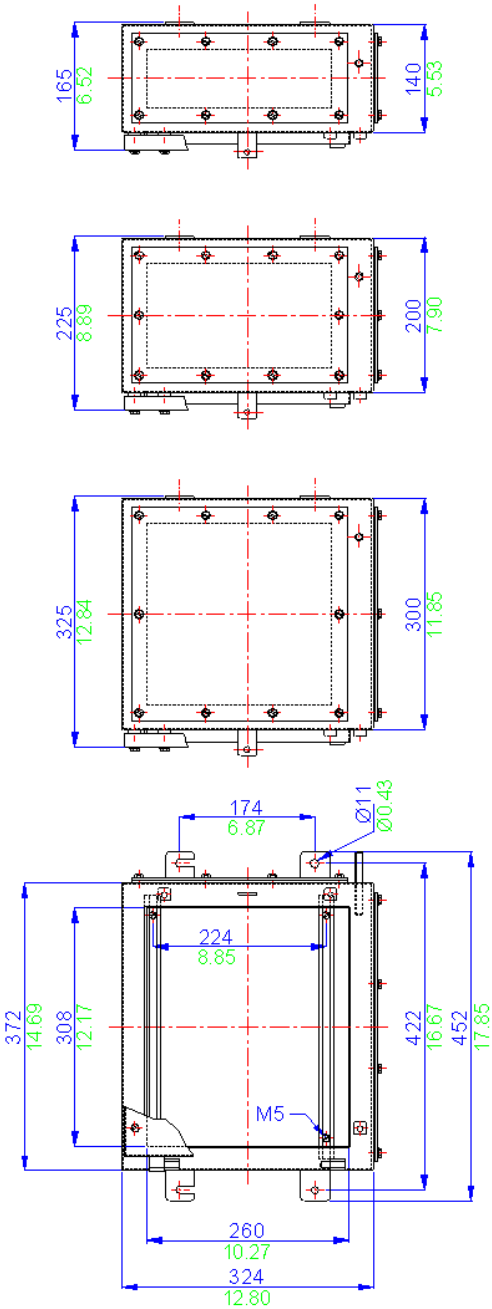

All **blue** dimensions in mm, all **green** dimensions in decimal inches (drawing not to scale)

SX3 / MSX3

Stainless Steel and Mild Steel Enclosures

IP66/7

Application
Hazardous and Industrial areas

Protection Degree
IP66 or 67

Certification
ATEX & IECEx (Zone 0, 1 & 2; Zone 20, 21 & 22)
CSA Ex e (Class 1 Zone 1 & Zone 2)
FM AEx e(Class 1 Zone 1 & Zone 2)
TR CU Ex e (Zone 1 & Zone 2)
NEMA 4X (CSA, UL & FM)
Class 1 Division 2

Material
Stainless steel 316 (1.4404) or Mild steel

Temperature Rating
Hazardous Area: -50°C to +175°C
Non Hazardous: -60°C to +200°C

Power Rating
42.289W

Terminal Populations (Maximum Number of Rails = 3)

Calculations do not include the use of end stops, end plates and separators. Check that the enclosure can accommodate the cable bending radius and that the earth stud and entry location will permit the required number of terminals to be fitted

Weidmuller	
SAK 2.5	168
SAK 4	156
SAK 6	126
SAK 10	102
SAK 16	84
SAK 35	63
SAK 70	45
WDU 2.5	201
WDU 4	168
WDU 6	126
WDU 10	102
WDU 16	84

Phoenix	
UK 2.5 N	201
UK 3 N	201
UK 5 N	168
UK 10 N	102
UK 16 N	84
UK 35 N	69

Wago	
280-992	189
280-999	189
281-691	162
281-992	162
281-993	108
282-691	126
284-691	99
283-691	56
285-691	38
280-998	189
281-998	162
264-120	168
264-220	99
264-132(2)	36
264-134(4)	24
262-132(2)	36
264-134(4)	24

Drilling Envelope Dimensions (mm)

	Side A - C		Side B - D	
	140	200	140	200
Width	307	307	363	363
Height	75	135	75	135

* With glandplate fitted

Gland Entry Matrix *

Size	Side A - C		Side B - D	
	140	200	140	200
M16	16	36	20	45
M20	12	24	16	28
M25	7	15	8	21
M32	5	10	6	12
M40	4	8	5	8

* Using standard gland clearances

Specifications

Part Number	Material	Width (mm)	Length (mm)	Depth (mm)	Weight (g)
SX3.140	Stainless Steel	372	448	140	11300
SX3.200	Stainless Steel	372	448	200	13300
SX3.300	Stainless Steel	372	448	300	16600
MSX3.140	Mild Steel	372	448	140	11300
MSX3.200	Mild Steel	372	448	200	13300
MSX3.300	Mild Steel	372	448	300	16600

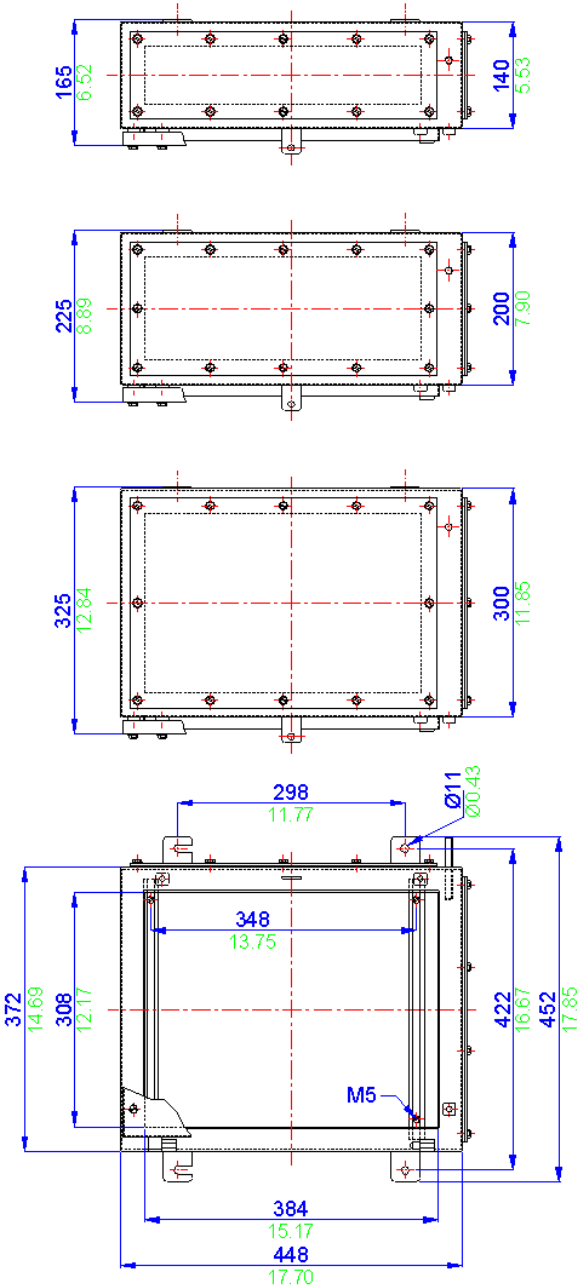

All **blue** dimensions in mm, all **green** dimensions in decimal inches (drawing not to scale)

SX4 / MSX4

Stainless Steel and Mild Steel Enclosures

IP66/7

Application
Hazardous and Industrial areas

Protection Degree
IP66 or 67

Certification
ATEX & IECEx (Zone 0, 1 & 2; Zone 20, 21 & 22)
CSA Ex e (Class 1 Zone 1 & Zone 2)
FM AEx e(Class 1 Zone 1 & Zone 2)
TR CU Ex e (Zone 1 & Zone 2)
NEMA 4X (CSA, UL & FM)
Class 1 Division 2

Material
Stainless steel 316 (1.4404) or Mild steel

Temperature Rating
Hazardous Area: -50°C to +175°C
Non Hazardous: -60°C to +200°C

Power Rating
44.726W

Terminal Populations (Maximum Number of Rails = 3)

Calculations do not include the use of end stops, end plates and separators. Check that the enclosure can accommodate the cable bending radius and that the earth stud and entry location will permit the required number of terminals to be fitted

Weidmuller	
SAK 2.5	198
SAK 4	183
SAK 6	150
SAK 10	120
SAK 16	99
SAK 35	75
SAK 70	54
WDU 2.5	237
WDU 4	198
WDU 6	150
WDU 10	120
WDU 16	99

Phoenix	
UK 2.5 N	237
UK 3 N	237
UK 5 N	198
UK 10 N	102
UK 16 N	99
UK 35 N	81

Wago	
280-992	222
280-999	222
281-691	189
281-992	189
281-993	126
282-691	147
284-691	117
283-691	66
285-691	44
280-998	222
281-998	189
264-120	198
264-220	117
264-132(2)	42
264-134(4)	30
262-132(2)	42
264-134(4)	30

Drilling Envelope Dimensions (mm)

	Side A - C		Side B - D	
	140	200	140	200
Width	307	307	425	425
Height	75	135	75	135

* With glandplate fitted

Gland Entry Matrix *

Size	Side A - C		Side B - D	
	140	200	140	200
M16	18	36	26	52
M20	14	24	20	36
M25	6	18	10	24
M32	5	10	7	14
M40	4	8	6	10

* Using standard gland clearances

Specifications

Part Number	Material	Width (mm)	Length (mm)	Depth (mm)	Weight (g)
SX4.140	Stainless Steel	372	510	140	12700
SX4.200	Stainless Steel	372	510	200	14800
SX4.300	Stainless Steel	372	510	300	18300
MSX4.140	Mild Steel	372	510	140	12700
MSX4.200	Mild Steel	372	510	200	14800
MSX4.300	Mild Steel	372	510	300	18300

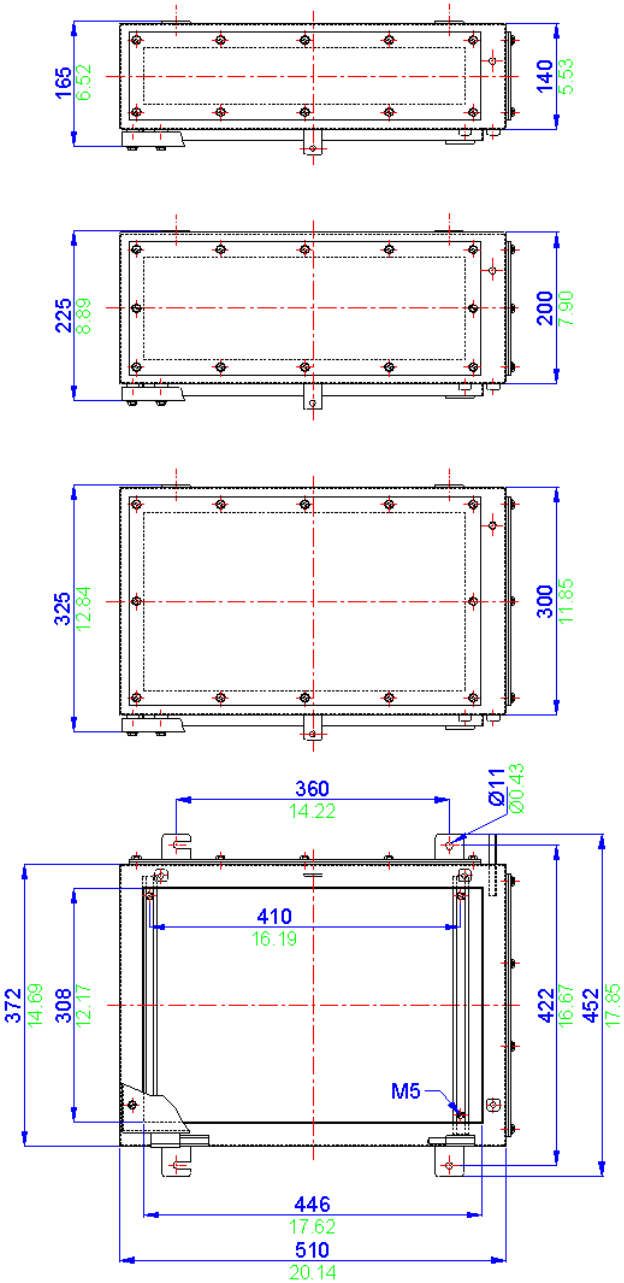

All **blue** dimensions in mm, all **green** dimensions in decimal inches (drawing not to scale)

SX5 / MSX5

Stainless Steel and Mild Steel Enclosures

IP66/7

Application
Hazardous and Industrial areas

Protection Degree
IP66 or 67

Certification
ATEX & IECEx (Zone 0, 1 & 2; Zone 20, 21 & 22)
CSA Ex e (Class 1 Zone 1 & Zone 2)
FM AEx e(Class 1 Zone 1 & Zone 2)
TR CU Ex e (Zone 1 & Zone 2)
NEMA 4X (CSA, UL & FM)
Class 1 Division 2

Material
Stainless steel 316 (1.4404) or Mild steel

Temperature Rating
Hazardous Area: -50°C to +175°C
Non Hazardous: -60°C to +200°C

Power Rating
50.328W

Terminal Populations (Maximum Number of Rails = 4)

Calculations do not include the use of end stops, end plates and separators. Check that the enclosure can accommodate the cable bending radius and that the earth stud and entry location will permit the required number of terminals to be fitted

Weidmuller	
SAK 2.5	264
SAK 4	244
SAK 6	200
SAK 10	160
SAK 16	132
SAK 35	100
SAK 70	72
WDU 2.5	316
WDU 4	264
WDU 6	200
WDU 10	160
WDU 16	132

Phoenix	
UK 2.5 N	316
UK 3 N	316
UK 5 N	264
UK 10 N	160
UK 16 N	132
UK 35 N	108

Wago	
280-992	296
280-999	296
281-691	252
281-992	252
281-993	189
282-691	196
284-691	156
283-691	99
285-691	66
280-998	296
281-998	252
264-120	264
264-220	156
264-132(2)	56
264-134(4)	40
262-132(2)	56
264-134(4)	40

Drilling Envelope Dimensions (mm)

	Side A - C		Side B - D	
	140	200	140	200
Width	445	445	425	425
Height	75	135	75	135

* With glandplate fitted

Gland Entry Matrix *

Size	Side A - C		Side B - D	
	140	200	140	200
M16	26	55	26	52
M20	20	36	20	36
M25	10	27	10	24
M32	7	14	7	14
M40	6	12	6	10

* Using standard gland clearances

Specifications

Part Number	Material	Width (mm)	Length (mm)	Depth (mm)	Weight (g)
SX5.140	Stainless Steel	510	510	140	17000
SX5.200	Stainless Steel	510	510	200	20000
SX5.300	Stainless Steel	510	510	300	25000
MSX5.140	Mild Steel	510	510	140	17000
MSX5.200	Mild Steel	510	510	200	20000
MSX5.300	Mild Steel	510	510	300	25000

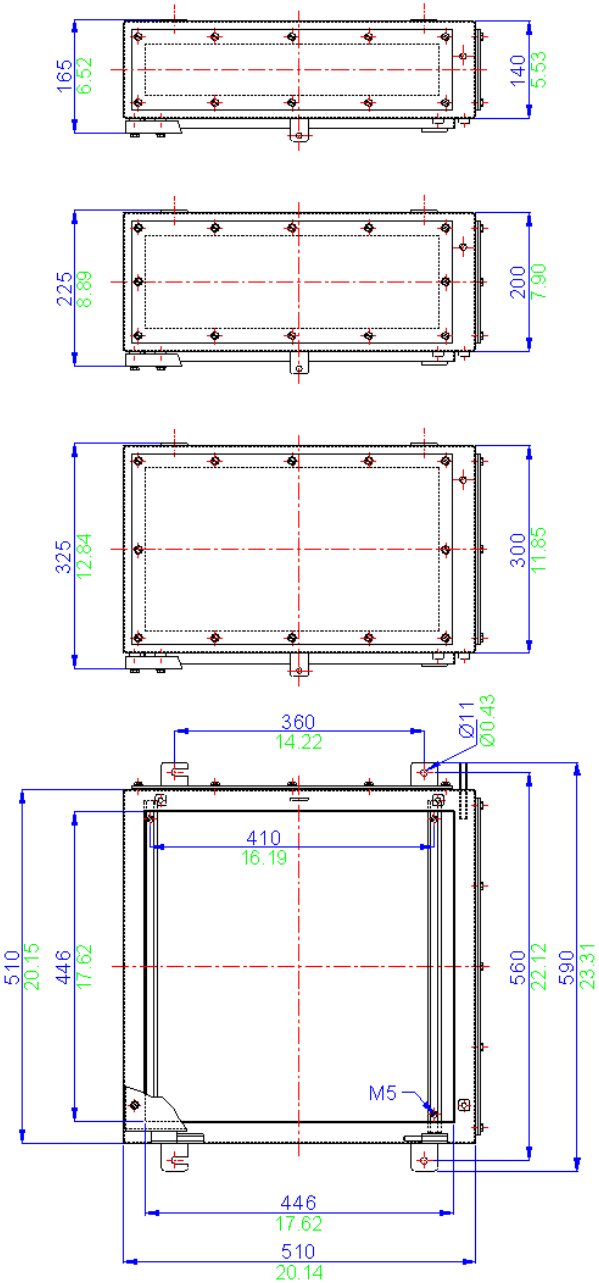

All **blue** dimensions in mm, all **green** dimensions in decimal inches (drawing not to scale)

SX6 / MSX6

Stainless Steel and Mild Steel Enclosures

IP66/7

Application
Hazardous and Industrial areas

Protection Degree
IP66 or 67

Certification
ATEX & IECEx (Zone 0, 1 & 2; Zone 20, 21 & 22)
CSA Ex e (Class 1 Zone 1 & Zone 2)
FM AEx e(Class 1 Zone 1 & Zone 2)
TR CU Ex e (Zone 1 & Zone 2)
NEMA 4X (CSA, UL & FM)
Class 1 Division 2

Material
Stainless steel 316 (1.4404) or Mild steel

Temperature Rating
Hazardous Area: -50°C to +175°C
Non Hazardous: -60°C to +200°C

Power Rating
57.383W

Terminal Populations (Maximum Number of Rails = 4)

Calculations do not include the use of end stops, end plates and separators. Check that the enclosure can accommodate the cable bending radius and that the earth stud and entry location will permit the required number of terminals to be fitted

Weidmuller	
SAK 2.5	440
SAK 4	404
SAK 6	332
SAK 10	264
SAK 16	220
SAK 35	168
SAK 70	120
WDU 2.5	528
WDU 4	440
WDU 6	332
WDU 10	264
WDU 16	220

Phoenix	
UK 2.5 N	524
UK 3 N	524
UK 5 N	440
UK 10 N	264
UK 16 N	229
UK 35 N	176

Wago	
280-992	496
280-999	496
281-691	424
281-992	424
281-993	318
282-691	328
284-691	264
283-691	165
285-691	114
280-998	496
281-998	424
264-120	440
264-220	264
264-132(2)	92
264-134(4)	64
262-132(2)	92
264-134(4)	64

Drilling Envelope Dimensions (mm)

	Side A - C		Side B - D	
	140	200	140	200
Width	445	445	695	695
Height	75	135	75	135

* With glandplate fitted

Gland Entry Matrix *

Size	Side A - C		Side B - D	
	140	200	140	200
M16	26	55	42	85
M20	20	36	34	60
M25	10	27	18	42
M32	7	14	11	22
M40	6	12	10	18

* Using standard gland clearances

Specifications

Part Number	Material	Width (mm)	Length (mm)	Depth (mm)	Weight (g)
SX6.140	Stainless Steel	510	780	140	24000
SX6.200	Stainless Steel	510	780	200	27000
SX6.300	Stainless Steel	510	780	300	32000
MSX6.140	Mild Steel	510	780	140	24000
MSX6.200	Mild Steel	510	780	200	27000
MSX6.300	Mild Steel	510	780	300	32000

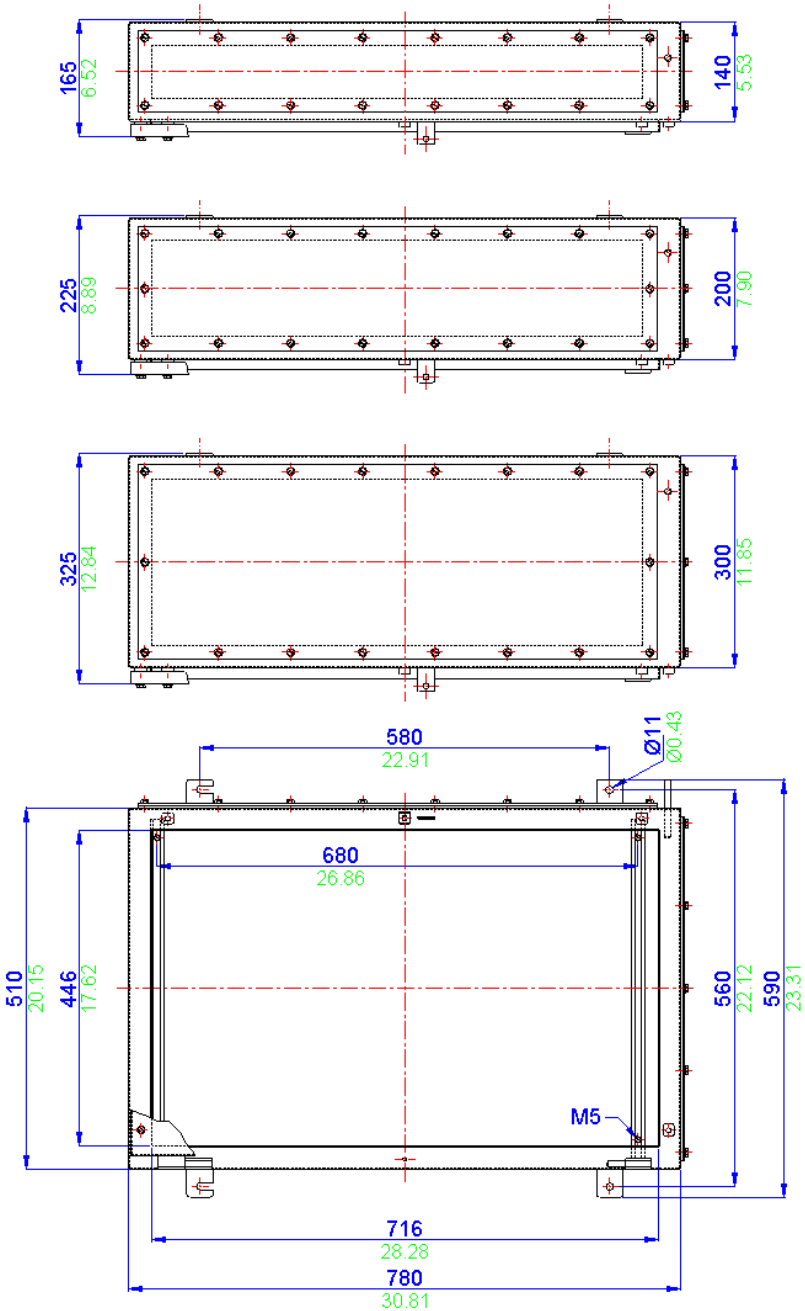

All **blue** dimensions in mm, all **green** dimensions in decimal inches (drawing not to scale)

SX7 / MSX7

Stainless Steel and Mild Steel Enclosures

IP66/7

Application
Hazardous and Industrial areas

Protection Degree
IP66 or 67

Certification
ATEX & IECEx (Zone 0, 1 & 2; Zone 20, 21 & 22)
CSA Ex e (Class 1 Zone 1 & Zone 2)
FM AEx e(Class 1 Zone 1 & Zone 2)
TR CU Ex e (Zone 1 & Zone 2)
NEMA 4X (CSA, UL & FM)
Class 1 Division 2

Material
Stainless steel 316 (1.4404) or Mild steel

Temperature Rating
Hazardous Area: -50°C to +175°C
Non Hazardous: -60°C to +200°C

Power Rating
68.000W

Terminal Populations (Maximum Number of Rails = 5)

Calculations do not include the use of end stops, end plates and separators. Check that the enclosure can accommodate the cable bending radius and that the earth stud and entry location will permit the required number of terminals to be fitted

Weidmuller	
SAK 2.5	685
SAK 4	635
SAK 6	520
SAK 10	415
SAK 16	345
SAK 35	260
SAK 70	150
WDU 2.5	822
WDU 4	685
WDU 6	520
WDU 10	415
WDU 16	345

Phoenix	
UK 2.5 N	820
UK 3 N	820
UK 5 N	685
UK 10 N	415
UK 16 N	345
UK 35 N	280

Wago	
280-992	775
280-999	775
281-691	660
281-992	660
281-993	528
282-691	510
284-691	410
283-691	272
285-691	188
280-998	775
281-998	660
264-120	685
264-220	410
264-132(2)	145
264-134(4)	100
262-132(2)	145
264-134(4)	100

Drilling Envelope Dimensions (mm)

	Side A - C		Side B - D	
	140	200	140	200
Width	585	585	865	865
Height	75	135	75	135

* With glandplate fitted

Gland Entry Matrix *

Size	Side A - C		Side B - D	
	140	200	140	200
M16	36	72	54	110
M20	28	48	42	72
M25	14	36	22	54
M32	10	20	14	28
M40	8	16	12	24

* Using standard gland clearances

Specifications

Part Number	Material	Width (mm)	Length (mm)	Depth (mm)	Weight (g)
SX7.140	Stainless Steel	650	950	140	35000
SX7.200	Stainless Steel	650	950	200	39000
SX7.300	Stainless Steel	650	950	300	45000
MSX7.140	Mild Steel	650	950	140	35000
MSX7.200	Mild Steel	650	950	200	39000
MSX7.300	Mild Steel	650	950	300	45000

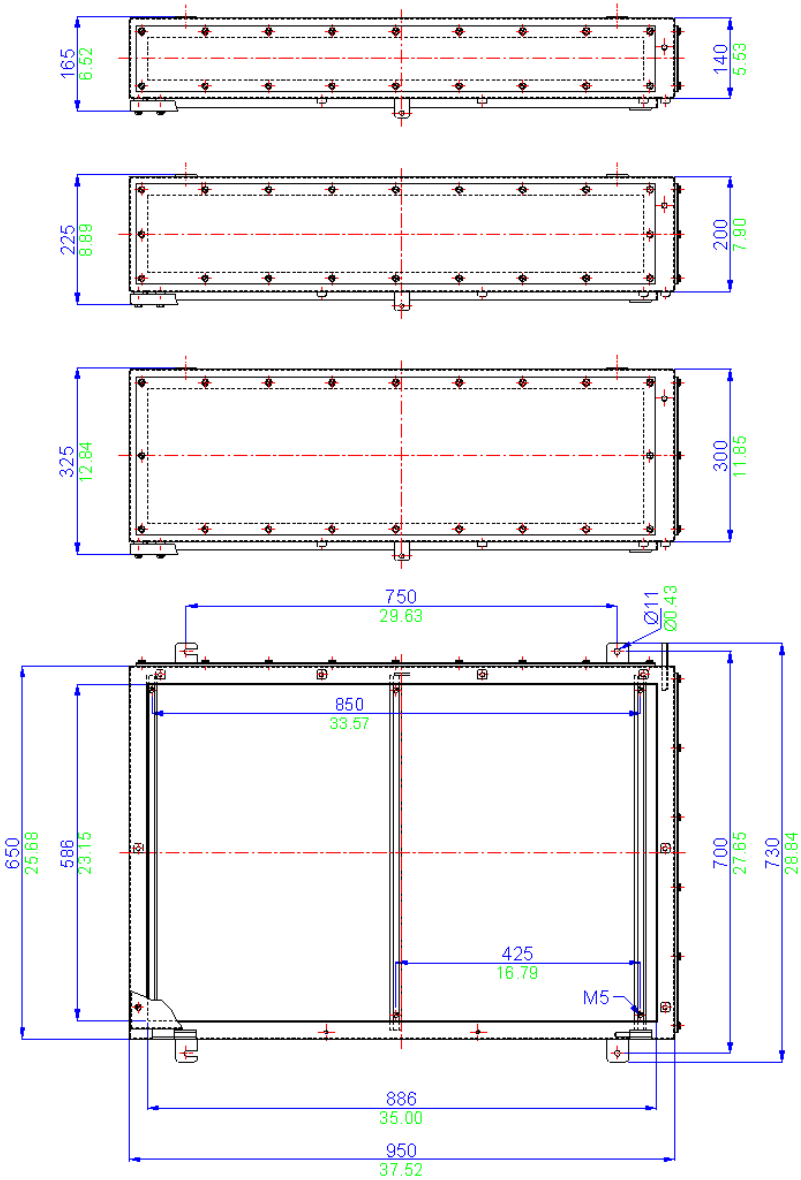

All **blue** dimensions in mm, all **green** dimensions in decimal inches (drawing not to scale)

SX8 / MSX8

Stainless Steel and Mild Steel Enclosures

IP66/7

Application
Hazardous and Industrial areas

Protection Degree
IP66 or 67

Certification
ATEX & IECEx (Zone 0, 1 & 2; Zone 20, 21 & 22)
CSA Ex e (Class 1 Zone 1 & Zone 2)
FM AEx e(Class 1 Zone 1 & Zone 2)
TR CU Ex e (Zone 1 & Zone 2)
NEMA 4X (CSA, UL & FM)
Class 1 Division 2

Material
Stainless steel 316 (1.4404) or Mild steel

Temperature Rating
Hazardous Area: -50°C to +175°C
Non Hazardous: -60°C to +200°C

Power Rating
119.462W

Terminal Populations (Maximum Number of Rails = 5)

Calculations do not include the use of end stops, end plates and separators. Check that the enclosure can accommodate the cable bending radius and that the earth stud and entry location will permit the required number of terminals to be fitted

Weidmuller	
SAK 2.5	1295
SAK 4	635
SAK 6	520
SAK 10	415
SAK 16	345
SAK 35	260
SAK 70	150
WDU 2.5	1554
WDU 4	1295
WDU 6	520
WDU 10	415
WDU 16	345

Phoenix	
UK 2.5 N	820
UK 3 N	820
UK 5 N	685
UK 10 N	415
UK 16 N	345
UK 35 N	280

Wago	
280-992	775
280-999	775
281-691	660
281-992	660
281-993	528
282-691	510
284-691	410
283-691	272
285-691	188
280-998	775
281-998	660
264-120	685
264-220	410
264-132(2)	145
264-134(4)	100
262-132(2)	145
264-134(4)	100

Drilling Envelope Dimensions (mm)

	Side A - C		Side B - D	
	140	200	140	200
Width	735	735	1165	1165
Height	75	135	75	135

* With glandplate fitted

Gland Entry Matrix *

Size	Side A - C		Side B - D	
	140	200	140	200
M16	45	90	72	150
M20	36	60	58	100
M25	18	45	30	72
M32	12	24	20	40
M40	10	20	17	32

* Using standard gland clearances

Specifications

Part Number	Material	Width (mm)	Length (mm)	Depth (mm)	Weight (g)
SX8.140	Stainless Steel	800	1250	140	40000
SX8.200	Stainless Steel	800	1250	200	52000
SX8.300	Stainless Steel	800	1250	300	72000
MSX8.140	Mild Steel	800	1250	140	40000
MSX8.200	Mild Steel	800	1250	200	52000
MSX8.300	Mild Steel	800	1250	300	72000

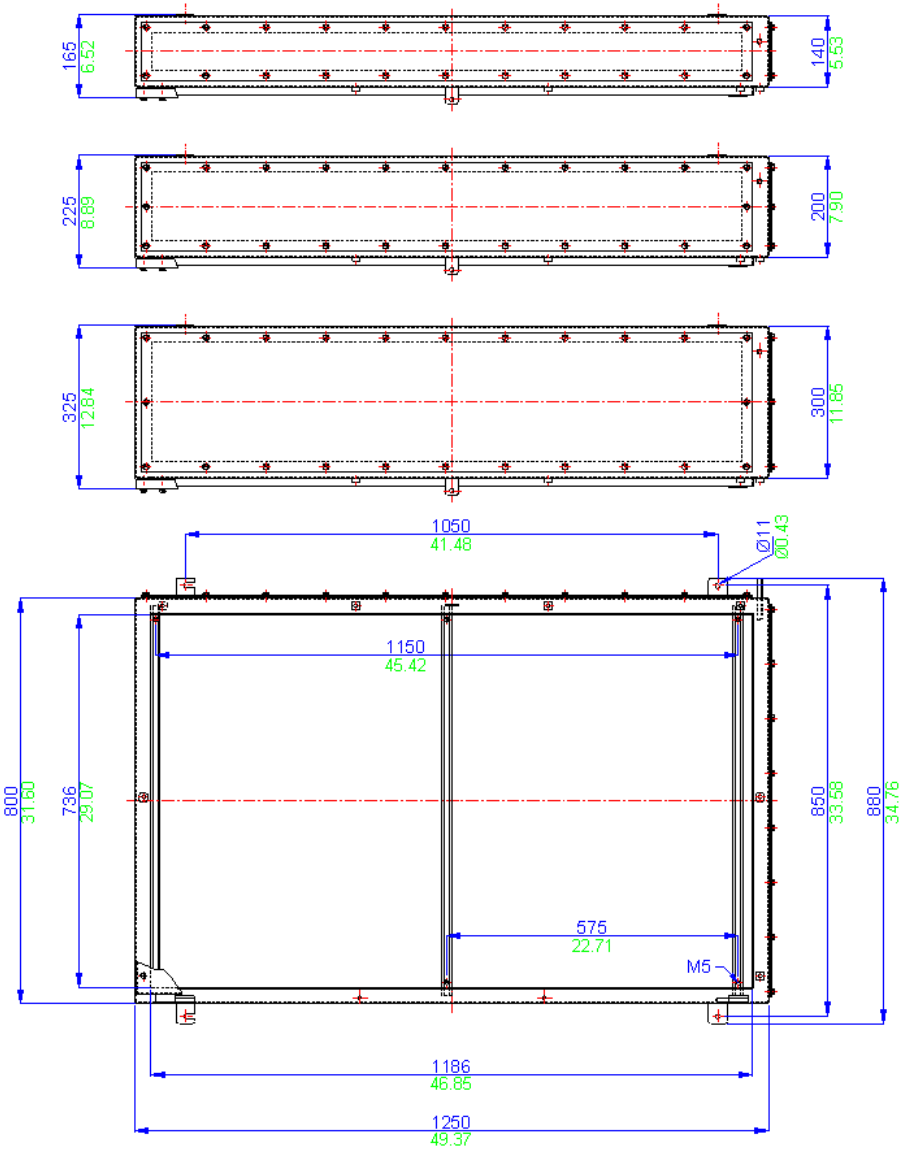

All **blue** dimensions in mm, all **green** dimensions in decimal inches (drawing not to scale)

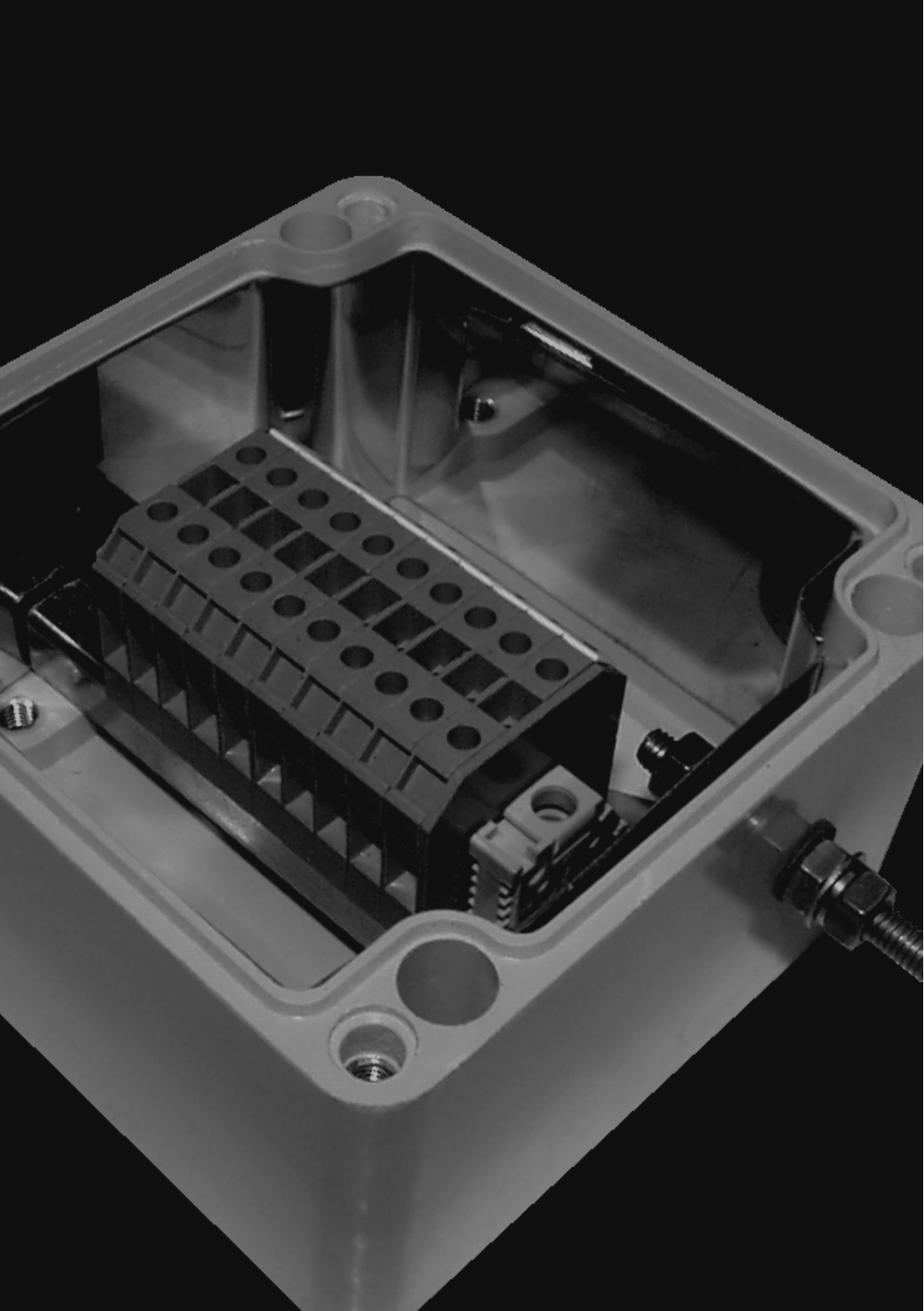

BPG

The BPG range comprises 16 sizes of enclosure manufactured in glass reinforced polyester (GRP). This material is highly resistant to contamination from oils, fats, aliphatic and aromatic carbohydrates, bacteria and enzymes. It is also suitable for LSOH (low smoke zero halogen) applications.

Polyester gives excellent mechanical strength and life expectancy. The wall thickness is sufficient to allow tapped entry holes to be machined in the walls of the enclosure and it provides a very good alternative to aluminium or cast iron.

ABTECH mould the BPG range from SMC material rather than DMC which is the most common form of GRP. In this method the glass reinforcement takes the form of sheets rather than short strands. This gives much greater mechanical strength and also in the event of the enclosure being exposed to fire conditions the structure holds together even if the resin is depleted due to the elevated temperatures. This is demonstrated by the fact that the BPG range when fitted with ceramic terminals meets the requirements of IEC 331 (750°C (1382°F) for 3 hours) and also BS6387/1983 (950°C (1742°F) for 3 hours - flame only). Further information about this testing procedure can be found in Section 6 of this catalogue.

Due to the enclosure's labyrinth seal system, whereby the seal is protected from external forces, the BPG range has excellent ingress protection qualities which mean that the enclosures are tested to and passed IP66/67. They have also undergone and passed the Shell/ERA deluge test which was devised to adequately test enclosures and electrical equipment which is routinely subjected to ship decks conditions or fire deluge systems.

The mounting holes, although contained within the profile of the enclosure, sit outside the seal and all external fasteners and fixings are manufactured from 316 grade stainless steel to ensure reliability.

The BPG range has many features which lend itself to a whole host of applications including both industrial and hazardous area junction boxes, OEM applications, fire protection systems, tunnel wiring etc.

The BPG range can be machined, drilled, tapped with various thread forms, painted and of course it can be moulded in a variety of colours which gives a much improved durability of colour over painting.

The BPG range is also available carbon loaded (BPGC) which helps to reduce the surface resistance of the material and consequently reduce the risk of spark from static build up.

Earthing can be accomplished by various means. Internal / external earth stud which in turn can be connected to the terminal mounting rail or component mounting plate, an earth continuity plate (ECP) can be fitted around the inner walls to provide continuity for cable glands and various rail mounted earth terminals or proprietary earth bars can be fitted inside the enclosure.

The BPG range is suitable for a wide range of ambient conditions. Hazardous Area certified enclosures are suitable for -65°C to + 130°C. Non-Ex versions are suitable from -60°C to + 130°C.
For certified apparatus contact the ABTECH Sales department for ambient operating temperatures.

The BPG and BPGC enclosures are suitable for use in hazardous areas and can be supplied with a number of certificates, specifically ATEX EEx'e' to BS EN 50019 (zone 1 & 2) EEx'nA' to BS EN50021 (zone 2) and NEMA 4X (CSA, UL & FM class 1, div 2).

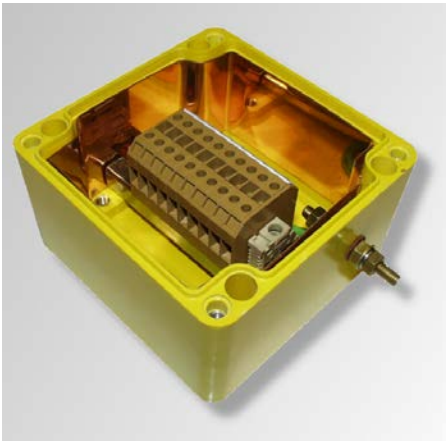

The BPG range can be supplied fitted with any component approved terminal to apparatus level or can be supplied empty as component approved for the clients own certification requirements.

BPG Range Features

- Wide Operating Temperature (-60°C to + 130°C) (-76°F to +266°F)
- Ingress Protection up to IP67
- Fire Resistant to IEC331
- Impact Resistant > 7Nm
- UV Resistant
- Can be drilled and tapped to accommodate most thread forms (NPT for example)
- UL, CSA, IEC Ex, ATEX, InMetro and TR CU Approvals
- Ideal for Petrochemical and Marine applications

Certification and Coding

	Zone 0	Zone 20	Zone 1	Zone 21	Zone 2	Zone 22
Ex e			•	•	•	•
Ex ai	•	•	•	•	•	•
Ex ab			•	•	•	•
Ex nA					•	•
Ex nR					•	•

Available with Apparatus or Component certification

Accessories and Options

The following table is a list of the available accessories suitable for particular standard sizes of BPG enclosures. Care should be taken when ordering accessories for use with enclosures intended for hazardous areas to ensure that compliance with certification is retained.

Part Number	Width (mm)	Height (mm)	Depth (mm)	**C** - Carbon Loaded (see note 1)	**EX** - Ex Certified (see note 2)	**EC** - Earth Continuity Plate	**ES** - Earth Stud	**AS** - Allen Head Fixing Screws	**TP** - Tamper Proof Screws	**EH** - External Hinges	**MP** - Component Mounting Plate	**MF** - External Mounting Feet	**EB** - Internal Earthing Bar	**MR** - DIN Standard Mounting Rail	**RF** - RFI Protection (see note 4)
BPG1	80	75	55	●	●			●	●	●	●	●		●	●
BPG2	110	75	55	●	●			●	●	●	●	●		●	●
BPG3	160	75	55	●	●			●	●	●	●	●		●	●
BPG4	190	75	55	●	●			●	●	●	●	●		●	●
BPG4.5	190	75	75	●	●			●	●	●	●	●		●	●
BPG5	230	75	55	●	●			●	●	●	●	●		●	●
BPG6	122	120	90	●	●	●	●	●	●	●	●	●	●	●	●
BPG7	220	120	90	●	●	●	●	●	●	●	●	●	●	●	●
BPG8	160	160	90	●	●	●	●	●	●	●	●	●	●	●	●
BPG9	260	160	90	●	●	●	●	●	●	●	●	●	●	●	●
BPG10	360	160	90	●	●	●	●	●	●	●	●	●	●	●	●
BPG11	560	160	90	●	●	●	●	●	●	●	●	●	●	●	●
BPG12	255	250	120	●	●	●	●	●	●	●	●	●	●	●	●
BPG13	400	250	120	●	●	●	●	●	●	●	●	●	●	●	●
BPG13.5	400	250	160	●	●	●	●	●	●	●	●	●	●	●	●
BPG14	600	250	120	●	●	●	●	●	●	●	●	●	●	●	●
BPG15	400	405	120	●	●	●	●	●	●	●	●	●	●	●	●

Ordering Example;

BPG8 EX EC EB MR

(BPG8 EX Certified with Earth Continuity Plate, Internal Earthing Bar and DIN standard Mounting Rail)

1. Carbon loading gives a surface tracking value of between 10MΩ and 10GΩ. Surface colour is black.
2. EEx'e' certification may be component or apparatus certified - please specify your requirements.
3. Radio Frequency Interference (RF) gasket may reduce IP rating. Enclosure may also be internally coated with RFI material.

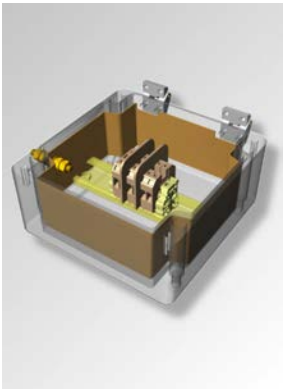

Copper earth continuity plate
(must also be fitted with earth stud)

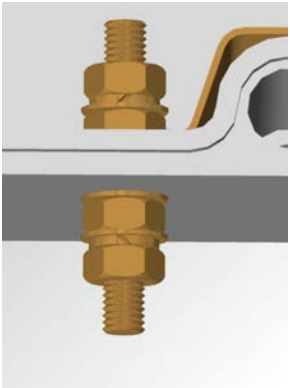

Earth Stud
(either brass or stainless steel)

Allen Head fixing screws
(grade 316)

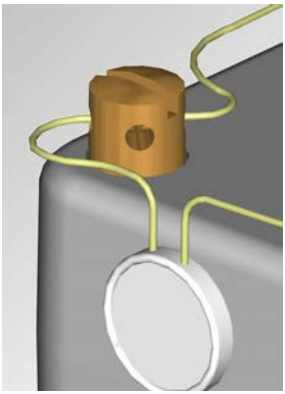

Tamper-proof screws

External hinges

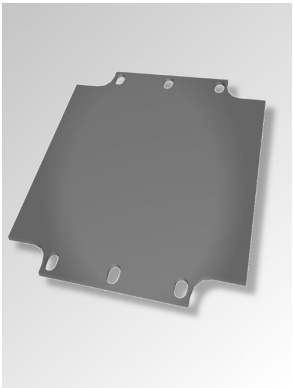

Component mounting plate
(tufnol as standard, steel an option)

External mounting feet
(stainless steel 316)

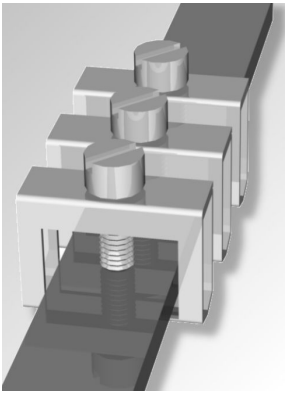

Internal Earthing bar
(can be fitted with clamps)

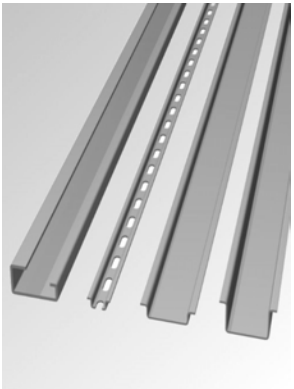

DIN standard mounting rail
(TS15, TS32 or TS35)

BPG1 / BPGc1

Glass Reinforced Polyester Enclosures

IP66/7

Application
Hazardous and Industrial areas

Protection Degree
IP66 or 67

Certification
ATEX & IECEx (Zone 1 & 2; Zone 21 & 22)
TR CU
NEMA 4X (CSA, UL & FM) Class 1 Division 2

Material
Glass Reinforced Polyester (RAL7001 grey) or
Carbon Loaded Glass Reinforced Polyester (Black)

Temperature Rating
Hazardous Area: -65°C to +130°C
Non Hazardous: -70°C to +130°C

Power Rating
8.390W

Terminal Populations (Maximum Number of Rails = 1)

Calculations do not include the use of end stops, end plates and separators. Check that the enclosure can accommodate the cable bending radius and that the earth stud and entry location will permit the required number of terminals to be fitted

Weidmuller	
BK4 (4 way)	2
BK6 (6 way)	1
BK12 (12 way)	1
MK 6/3	1
MK 6/4	1
MK 6/6	1
SAK 2.5	0
SAK 4	0
SAK 6N	0
SAK 10	0
SAK 16	0
SAK 35	0

Entrelec	
MA2.5/5	0
M4/6	0
M6/8	0
M10/10	0
M16/12	0
M35/16	0

Wago	
280-992	0
280-999	0
281-691	0
281-992	0
281-993	0
282-691	0
284-691	0
283-691	0
285-691	0
280-998	0
281-998	0
264-120	12
264-220	7
264-132(2)	2
264-134(4)	1
262-132(2)	2
264-134(4)	1

Drilling Envelope Dimensions (mm)

	Side A - C	Side B - D
Width	50	26
Height	36	30

Gland Entry Matrix *

Size	Side A - C	Side B - D
M16	1	0
M20	0	0
M25	0	0
M32	0	0
M40	0	0

* Using standard gland clearances

Specifications

Part Number	Material	Width (mm)	Length (mm)	Depth (mm)	Weight (g)
BPG1	GRP	80	75	55	230
BPGC1	Carbon Loaded GRP	80	75	55	230

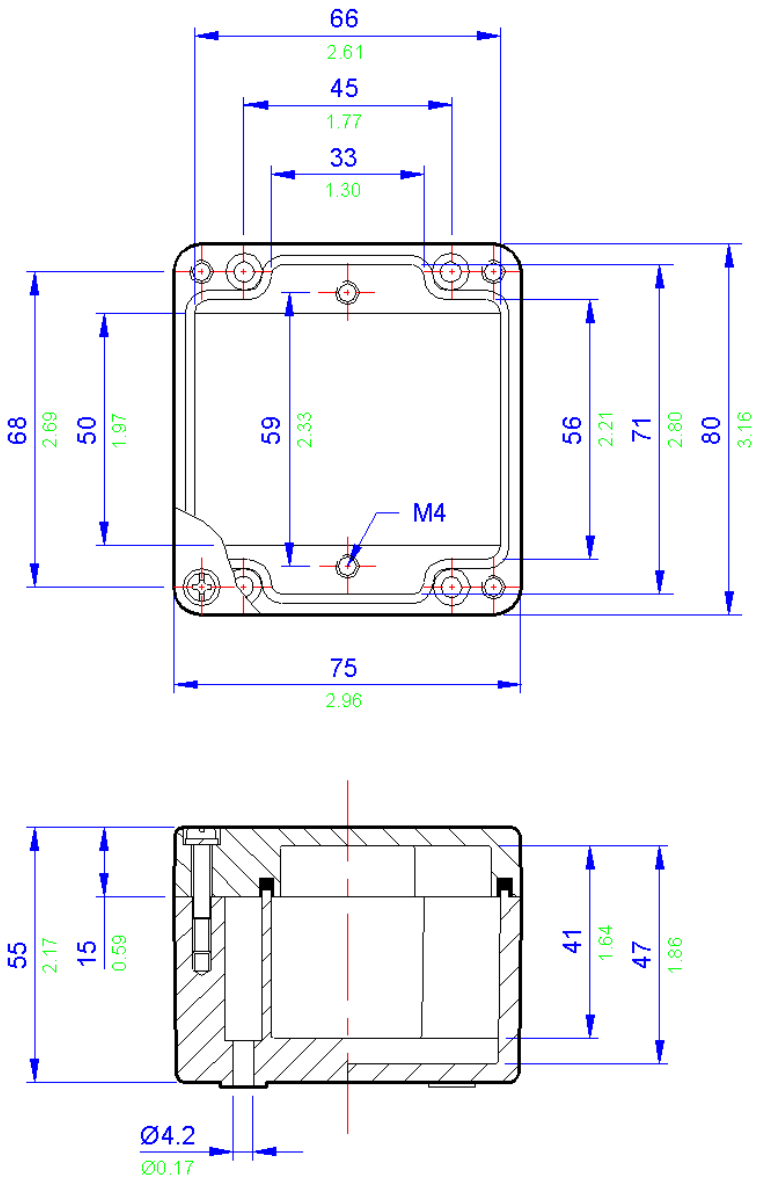

All **blue** dimensions in mm, all **green** dimensions in decimal inches (drawing not to scale)

BPG2 / BPGc2

Glass Reinforced Polyester Enclosures

IP66/7

Application
Hazardous and Industrial areas

Protection Degree
IP66 or 67

Certification
ATEX & IECEx (Zone 1 & 2; Zone 21 & 22)
TR CU
NEMA 4X (CSA, UL & FM) Class 1 Division 2

Material
Glass Reinforced Polyester (RAL7001 grey) or
Carbon Loaded Glass Reinforced Polyester (Black)

Temperature Rating
Hazardous Area: -65°C to +130°C
Non Hazardous: -70°C to +130°C

Power Rating
8.551W

Terminal Populations (Maximum Number of Rails = 1)

Calculations do not include the use of end stops, end plates and separators. Check that the enclosure can accommodate the cable bending radius and that the earth stud and entry location will permit the required number of terminals to be fitted

Weidmuller	
BK4 (4 way)	2
BK6 (6 way)	1
BK12 (12 way)	1
MK 6/3	1
MK 6/4	1
MK 6/6	1
SAK 2.5	0
SAK 4	0
SAK 6N	0
SAK 10	0
SAK 16	0
SAK 35	0

Entrelec	
MA2.5/5	0
M4/6	0
M6/8	0
M10/10	0
M16/12	0
M35/16	0

Wago	
280-992	0
280-999	0
281-691	0
281-992	0
281-993	0
282-691	0
284-691	0
283-691	0
285-691	0
280-998	0
281-998	0
264-120	12
264-220	7
264-132(2)	2
264-134(4)	1
262-132(2)	2
264-134(4)	1

Drilling Envelope Dimensions (mm)

	Side A - C	Side B - D
Width	80	26
Height	36	30

Gland Entry Matrix *

Size	Side A - C	Side B - D
M16	2	0
M20	0	0
M25	0	0
M32	0	0
M40	0	0

* Using standard gland clearances

Specifications

Part Number	Material	Width (mm)	Length (mm)	Depth (mm)	Weight (g)
BPG2	GRP	110	75	55	230
BPGC2	Carbon Loaded GRP	110	75	55	230

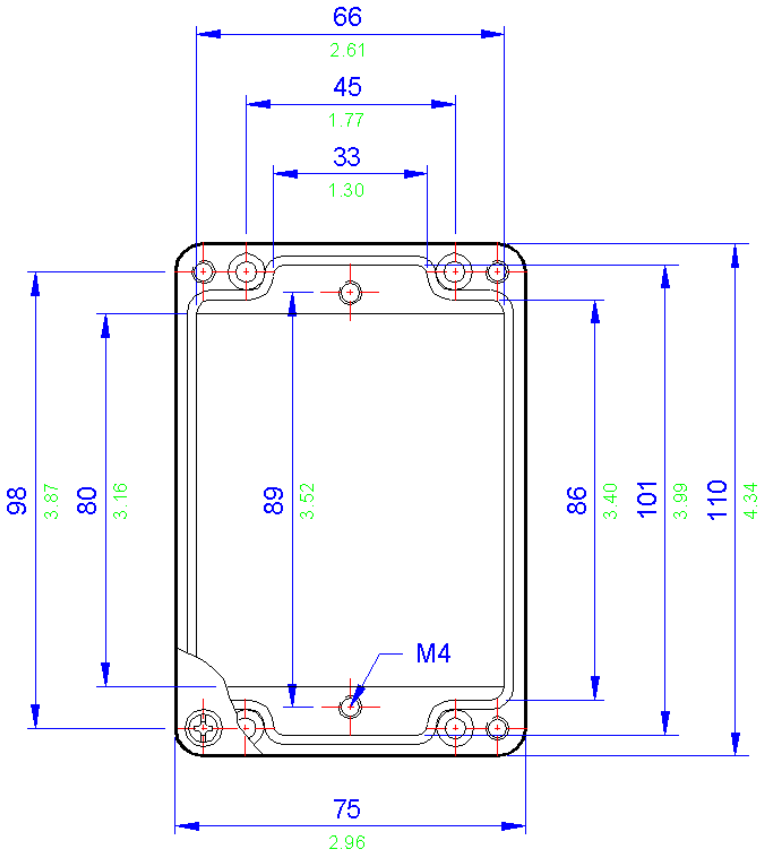

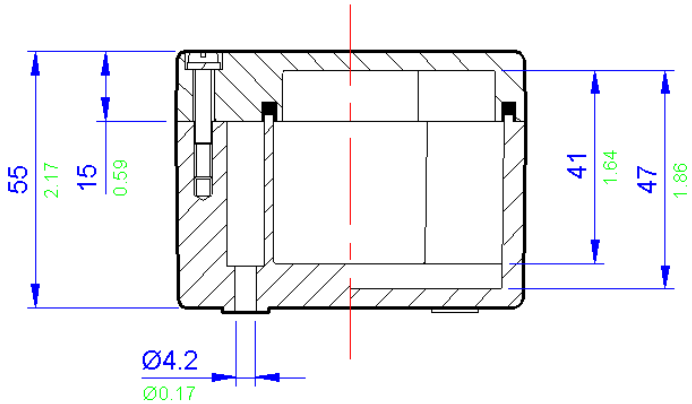

All **blue** dimensions in mm, all **green** dimensions in decimal inches (drawing not to scale)

BPG3 / BPGc3

Glass Reinforced Polyester Enclosures

IP66/7

Application
Hazardous and Industrial areas

Protection Degree
IP66 or 67

Certification
ATEX & IECEx (Zone 1 & 2; Zone 21 & 22)
TR CU
NEMA 4X (CSA, UL & FM) Class 1 Division 2

Material
Glass Reinforced Polyester (RAL7001 grey) or
Carbon Loaded Glass Reinforced Polyester (Black)

Temperature Rating
Hazardous Area: -65°C to +130°C
Non Hazardous: -70°C to +130°C

Power Rating
8.833W

Terminal Populations (Maximum Number of Rails = 1)

Calculations do not include the use of end stops, end plates and separators. Check that the enclosure can accommodate the cable bending radius and that the earth stud and entry location will permit the required number of terminals to be fitted

Weidmuller	
BK4 (4 way)	3
BK6 (6 way)	2
BK12 (12 way)	1
MK 6/3	2
MK 6/4	2
MK 6/6	1
SAK 2.5	0
SAK 4	0
SAK 6N	0
SAK 10	0
SAK 16	0
SAK 35	0

Entrelec	
MA2.5/5	0
M4/6	0
M6/8	0
M10/10	0
M16/12	0
M35/16	0

Wago	
280-992	0
280-999	0
281-691	0
281-992	0
281-993	0
282-691	0
284-691	0
283-691	0
285-691	0
280-998	0
281-998	0
264-120	19
264-220	11
264-132(2)	4
264-134(4)	3
262-132(2)	4
264-134(4)	3

Drilling Envelope Dimensions (mm)

	Side A - C	Side B - D
Width	130	27
Height	36	29

Gland Entry Matrix *

Size	Side A - C	Side B - D
M16	4	0
M20	0	0
M25	0	0
M32	0	0
M40	0	0

* Using standard gland clearances

Specifications

Part Number	Material	Width (mm)	Length (mm)	Depth (mm)	Weight (g)
BPG3	GRP	160	75	55	405
BPGC3	Carbon Loaded GRP	160	75	55	405

Technical Drawing

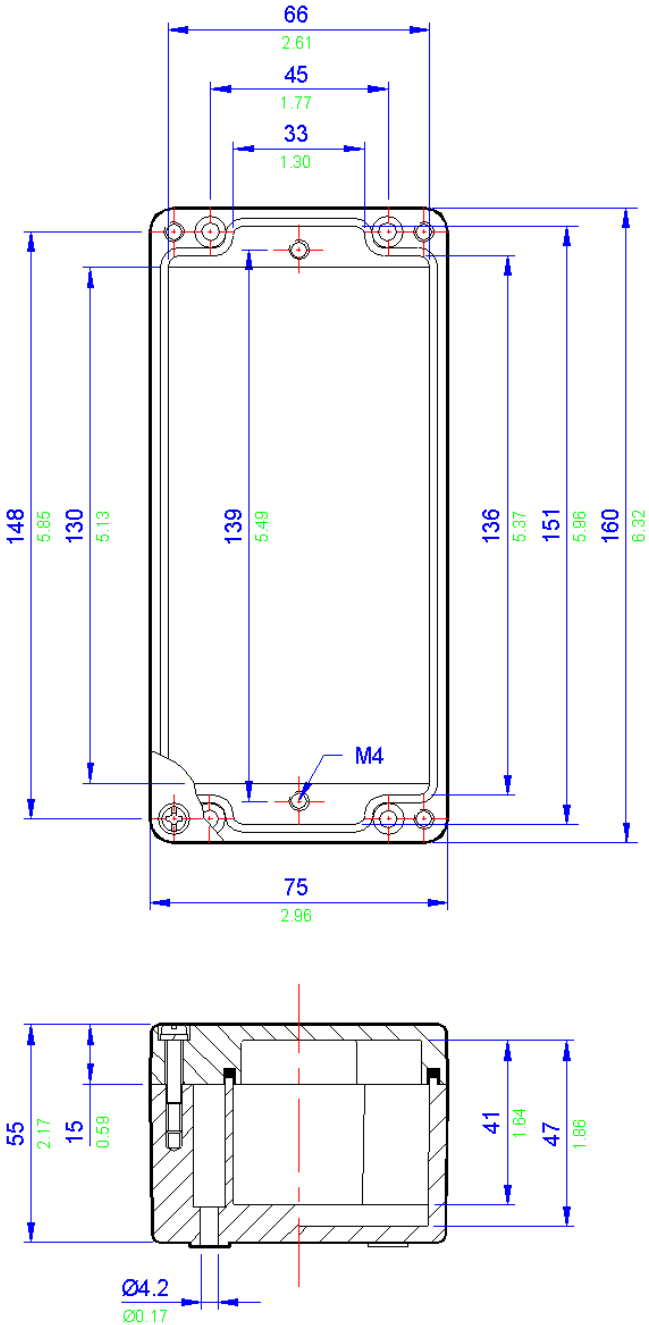

All **blue** dimensions in mm, all **green** dimensions in decimal inches (drawing not to scale)

BPG4 / BPGc4

Glass Reinforced Polyester Enclosures

IP66/7

Application
Hazardous and Industrial areas

Protection Degree
IP66 or 67

Certification
ATEX & IECEx (Zone 1 & 2; Zone 21 & 22)
TR CU
NEMA 4X (CSA, UL & FM) Class 1 Division 2

Material
Glass Reinforced Polyester (RAL7001 grey) or
Carbon Loaded Glass Reinforced Polyester (Black)

Temperature Rating
Hazardous Area: -65°C to +130°C
Non Hazardous: -70°C to +130°C

Power Rating
9.012W

Terminal Populations (Maximum Number of Rails = 1)

Calculations do not include the use of end stops, end plates and separators. Check that the enclosure can accommodate the cable bending radius and that the earth stud and entry location will permit the required number of terminals to be fitted

Weidmuller	
BK4 (4 way)	4
BK6 (6 way)	2
BK12 (12 way)	1
MK 6/3	3
MK 6/4	3
MK 6/6	2
SAK 2.5	0
SAK 4	0
SAK 6N	0
SAK 10	0
SAK 16	0
SAK 35	0

Entrelec	
MA2.5/5	0
M4/6	0
M6/8	0
M10/10	0
M16/12	0
M35/16	0

Wago	
280-992	0
280-999	0
281-691	0
281-992	0
281-993	0
282-691	0
284-691	0
283-691	0
285-691	0
280-998	0
281-998	0
264-120	25
264-220	15
264-132(2)	5
264-134(4)	3
262-132(2)	5
264-134(4)	3

Drilling Envelope Dimensions (mm)

	Side A - C	Side B - D
Width	160	27
Height	36	30

Gland Entry Matrix *

Size	Side A - C	Side B - D
M16	5	0
M20	0	0
M25	0	0
M32	0	0
M40	0	0

* Using standard gland clearances

Specifications

Part Number	Material	Width (mm)	Length (mm)	Depth (mm)	Weight (g)
BPG4	GRP	190	75	55	450
BPGC4	Carbon Loaded GRP	190	75	55	450

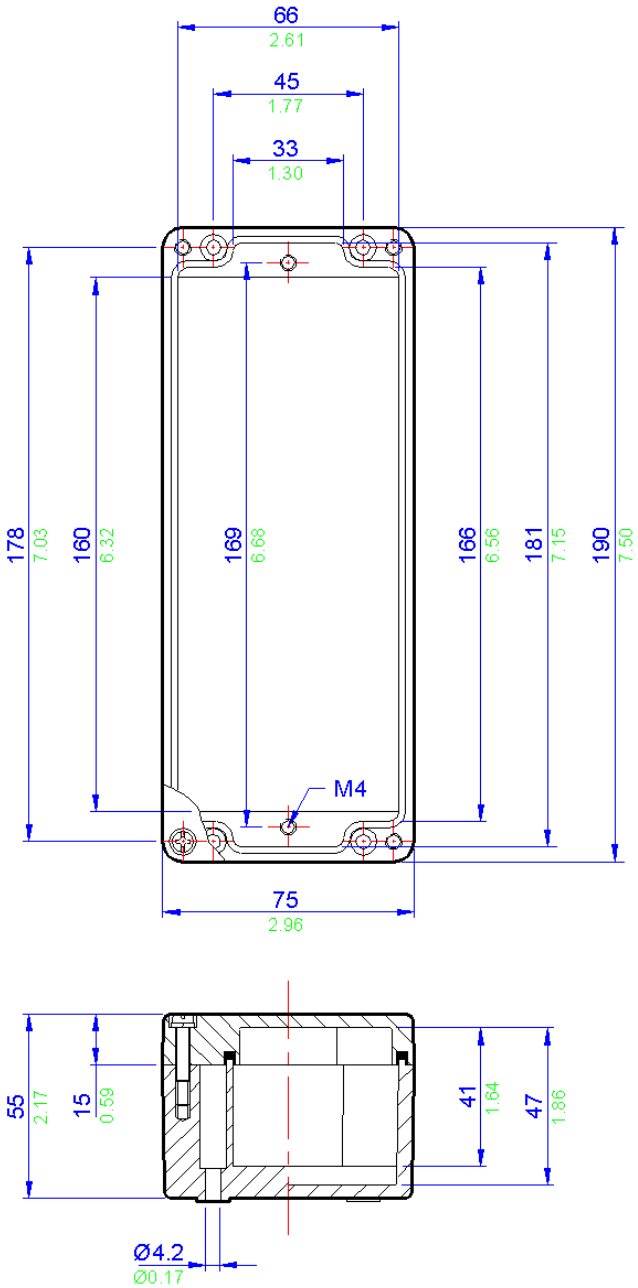

All **blue** dimensions in mm, all **green** dimensions in decimal inches (drawing not to scale)

BPG4.5/BPGc4.5 Glass Reinforced Polyester Enclosures IP66/7

Application
Hazardous and Industrial areas

Protection Degree
IP66 or 67

Certification
ATEX & IECEx (Zone 1 & 2; Zone 21 & 22)
TR CU
NEMA 4X (CSA, UL & FM) Class 1 Division 2

Material
Glass Reinforced Polyester (RAL7001 grey) or
Carbon Loaded Glass Reinforced Polyester (Black)

Temperature Rating
Hazardous Area: -65°C to +130°C
Non Hazardous: -70°C to +130°C

Power Rating
9.260W

Terminal Populations (Maximum Number of Rails = 1)

Calculations do not include the use of end stops, end plates and separators. Check that the enclosure can accommodate the cable bending radius and that the earth stud and entry location will permit the required number of terminals to be fitted

Weidmuller	
BK4 (4 way)	4
BK6 (6 way)	3
BK12 (12 way)	1
MK 6/3	3
MK 6/4	3
MK 6/6	2
SAK 2.5	0
SAK 4	0
SAK 6N	0
SAK 10	0
SAK 16	0
SAK 35	0

Entrelec	
MA2.5/5	0
M4/6	0
M6/8	0
M10/10	0
M16/12	0
M35/16	0

Wago	
280-992	0
280-999	0
281-691	0
281-992	0
281-993	0
282-691	0
284-691	0
283-691	0
285-691	0
280-998	28
281-998	24
264-120	25
264-220	15
264-132(2)	6
264-134(4)	4
262-132(2)	6
264-134(4)	4

Drilling Envelope Dimensions (mm)

	Side A - C	Side B - D
Width	55	52
Height	160	19

Gland Entry Matrix *

Size	Side A - C	Side B - D
M16	6	0
M20	4	0
M25	3	0
M32	0	0
M40	0	0

* Using standard gland clearances

Specifications

Part Number	Material	Width (mm)	Length (mm)	Depth (mm)	Weight (g)
BPG4.5	GRP	190	75	75	529
BPGC4.5	Carbon Loaded GRP	190	75	75	529

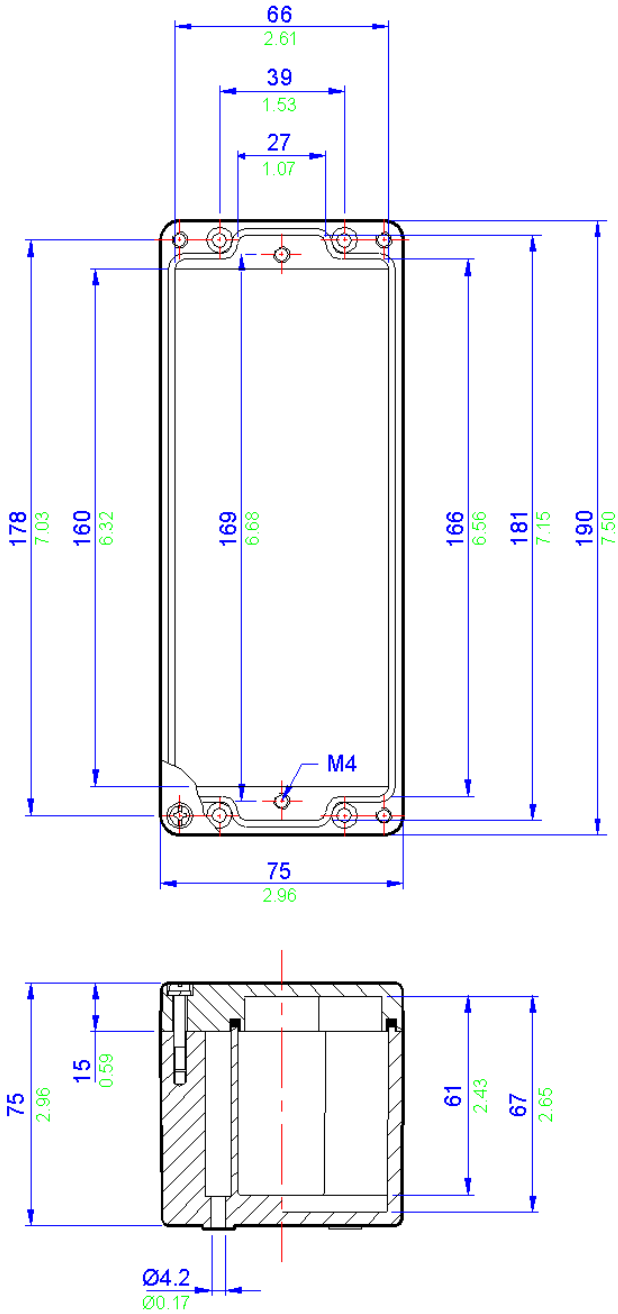

All **blue** dimensions in mm, all **green** dimensions in decimal inches (drawing not to scale)

BPG5 / BPGc5

Glass Reinforced Polyester Enclosures

IP66/7

Application
Hazardous and Industrial areas

Protection Degree
IP66 or 67

Certification
ATEX & IECEx (Zone 1 & 2; Zone 21 & 22)
TR CU
NEMA 4X (CSA, UL & FM) Class 1 Division 2

Material
Glass Reinforced Polyester (RAL7001 grey) or
Carbon Loaded Glass Reinforced Polyester (Black)

Temperature Rating
Hazardous Area: -65°C to +130°C
Non Hazardous: -70°C to +130°C

Power Rating
9.260W

Terminal Populations (Maximum Number of Rails = 1)

Calculations do not include the use of end stops, end plates and separators. Check that the enclosure can accommodate the cable bending radius and that the earth stud and entry location will permit the required number of terminals to be fitted

Weidmuller	
BK4 (4 way)	0
BK6 (6 way)	4
BK12 (12 way)	2
MK 6/3	4
MK 6/4	4
MK 6/6	2
SAK 2.5	0
SAK 4	0
SAK 6N	0
SAK 10	0
SAK 16	0
SAK 35	0

Entrelec	
MA2.5/5	0
M4/6	0
M6/8	0
M10/10	0
M16/12	0
M35/16	0

Wago	
280-992	0
280-999	0
281-691	0
281-992	0
281-993	0
282-691	0
284-691	0
283-691	0
285-691	0
280-998	0
281-998	0
264-120	32
264-220	19
264-132(2)	6
264-134(4)	4
262-132(2)	6
264-134(4)	4

Drilling Envelope Dimensions (mm)

	Side A - C	Side B - D
Width	90	23
Height	30	28

Gland Entry Matrix *

Size	Side A - C	Side B - D
M16	0	0
M20	0	0
M25	0	0
M32	0	0
M40	0	0

* Using standard gland clearances

Specifications

Part Number	Material	Width (mm)	Length (mm)	Depth (mm)	Weight (g)
BPG5	GRP	230	75	55	529
BPGC5	Carbon Loaded GRP	230	75	55	529

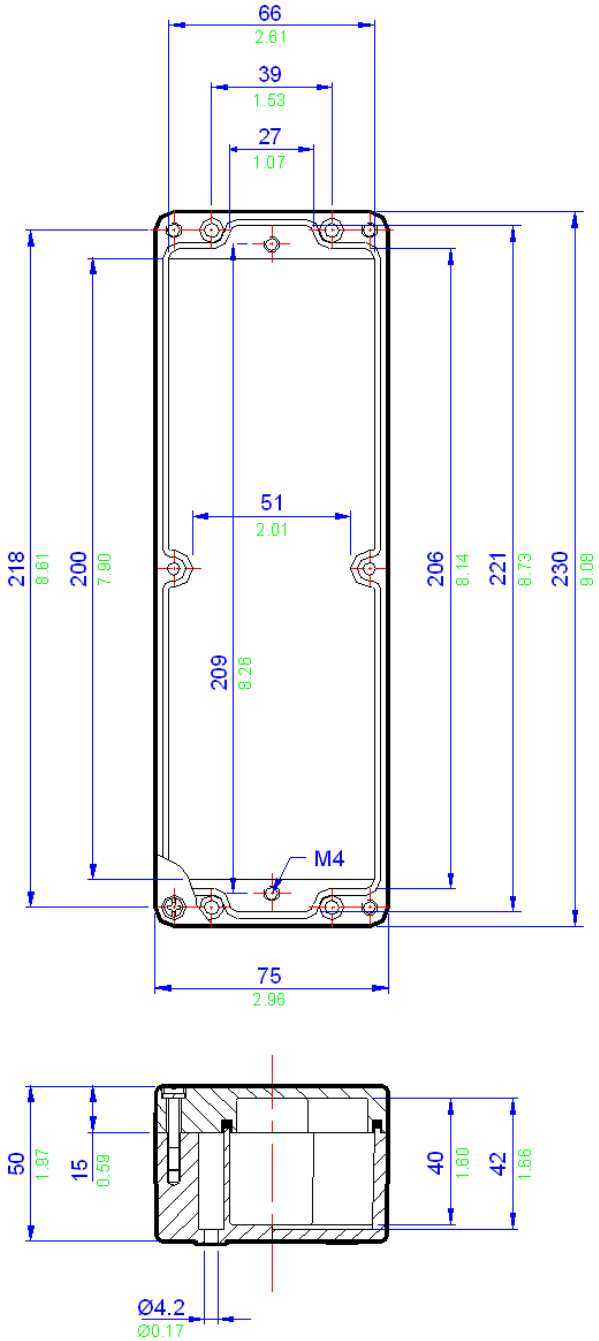

All **blue** dimensions in mm, all **green** dimensions in decimal inches (drawing not to scale)

BPG6 / BPGc6

Glass Reinforced Polyester Enclosures

IP66/7

Application
Hazardous and Industrial areas

Protection Degree
IP66 or 67

Certification
ATEX & IECEx (Zone 1 & 2; Zone 21 & 22)
TR CU
NEMA 4X (CSA, UL & FM) Class 1 Division 2

Material
Glass Reinforced Polyester (RAL7001 grey) or
Carbon Loaded Glass Reinforced Polyester (Black)

Temperature Rating
Hazardous Area: -65°C to +130°C
Non Hazardous: -70°C to +130°C

Power Rating
9.378W

Terminal Populations (Maximum Number of Rails = 1)

Calculations do not include the use of end stops, end plates and separators. Check that the enclosure can accommodate the cable bending radius and that the earth stud and entry location will permit the required number of terminals to be fitted

Weidmuller	
BK4 (4 way)	2
BK6 (6 way)	2
BK12 (12 way)	1
MK 6/3	1
MK 6/4	1
MK 6/6	1
SAK 2.5	14
SAK 4	13
SAK 6N	10
SAK 10	8
SAK 16	7
SAK 35	5

Entrelec	
MA2.5/5	17
M4/6	14
M6/8	8
M10/10	8
M16/12	7
M35/16	5

Wago	
280-992	15
280-999	15
281-691	13
281-992	13
281-993	13
282-691	10
284-691	8
283-691	6
285-691	0
280-998	15
281-998	13
264-120	13
264-220	8
264-132(2)	3
264-134(4)	2
262-132(2)	3
264-134(4)	2

Drilling Envelope Dimensions (mm)

	Side A - C	Side B - D
Width	75	54
Height	60	53

Gland Entry Matrix *

Size	Side A - C	Side B - D
M16	2	1
M20	1	1
M25	1	1
M32	1	0
M40	0	0

* Using standard gland clearances

Specifications

Part Number	Material	Width (mm)	Length (mm)	Depth (mm)	Weight (g)
BPG6	GRP	122	120	90	750
BPGC6	Carbon Loaded GRP	122	120	90	750

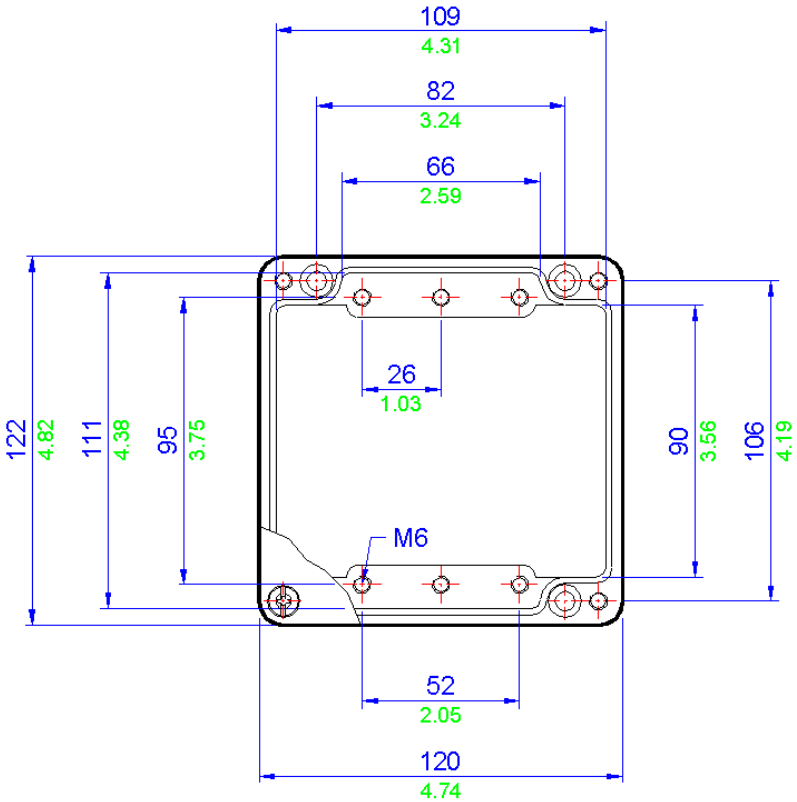

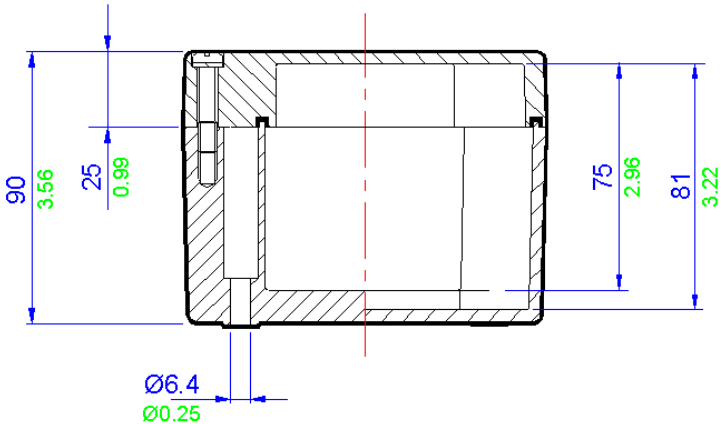

All **blue** dimensions in mm, all **green** dimensions in decimal inches (drawing not to scale)

BPG7 / BPGc7

Glass Reinforced Polyester Enclosures

IP66/7

Application
Hazardous and Industrial areas

Protection Degree
IP66 or 67

Certification
ATEX & IECEx (Zone 1 & 2; Zone 21 & 22)
TR CU
NEMA 4X (CSA, UL & FM) Class 1 Division 2

Material
Glass Reinforced Polyester (RAL7001 grey) or
Carbon Loaded Glass Reinforced Polyester
(Black)

Temperature Rating
Hazardous Area: -65°C to +130°C
Non Hazardous: -70°C to +130°C

Power Rating
10.500W

Terminal Populations (Maximum Number of Rails = 1)

Calculations do not include the use of end stops, end plates and separators. Check that the enclosure can accommodate the cable bending radius and that the earth stud and entry location will permit the required number of terminals to be fitted

Weidmuller	
BK4 (4 way)	5
BK6 (6 way)	3
BK12 (12 way)	2
MK 6/3	4
MK 6/4	4
MK 6/6	2
SAK 2.5	30
SAK 4	28
SAK 6N	22
SAK 10	18
SAK 16	15
SAK 35	11

Entrelec	
MA2.5/5	36
M4/6	30
M6/8	22
M10/10	18
M16/12	15
M35/16	11

Wago	
280-992	34
280-999	34
281-691	29
281-992	29
281-993	29
282-691	22
284-691	18
283-691	15
285-691	0
280-998	34
281-998	29
264-120	30
264-220	18
264-132(2)	6
264-134(4)	4
262-132(2)	6
264-134(4)	4

Drilling Envelope Dimensions (mm)

	Side A - C	Side B - D
Width	180	56
Height	60	53

Gland Entry Matrix *

Size	Side A - C	Side B - D
M16	10	1
M20	4	1
M25	3	1
M32	3	0
M40	0	0

* Using standard gland clearances

Specifications

Part Number	Material	Width (mm)	Length (mm)	Depth (mm)	Weight (g)
BPG7	GRP	220	120	90	1060
BPGC7	Carbon Loaded GRP	220	120	90	1060

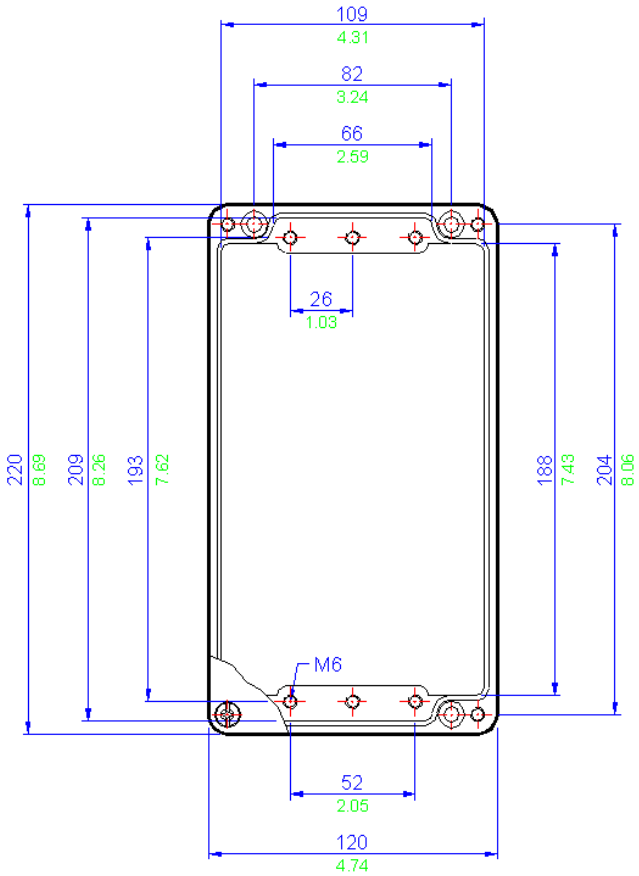

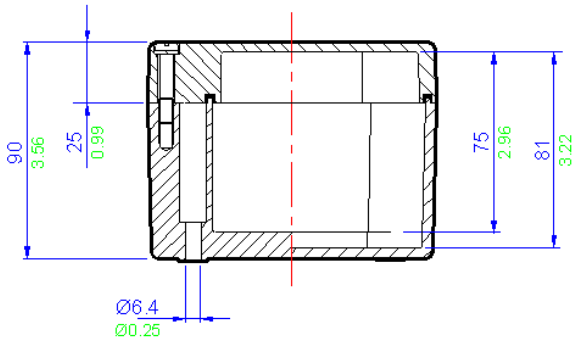

All **blue** dimensions in mm, all **green** dimensions in decimal inches (drawing not to scale)

BPG8 / BPGc8

Glass Reinforced Polyester Enclosures

IP66/7

Application
Hazardous and Industrial areas

Protection Degree
IP66 or 67

Certification
ATEX & IECEx (Zone 1 & 2; Zone 21 & 22)
TR CU
NEMA 4X (CSA, UL & FM) Class 1 Division 2

Material
Glass Reinforced Polyester (RAL7001 grey) or
Carbon Loaded Glass Reinforced Polyester (Black)

Temperature Rating
Hazardous Area: -65°C to +130°C
Non Hazardous: -70°C to +130°C

Power Rating
10.348W

Terminal Populations (Maximum Number of Rails = 1)

Calculations do not include the use of end stops, end plates and separators. Check that the enclosure can accommodate the cable bending radius and that the earth stud and entry location will permit the required number of terminals to be fitted

Weidmuller	
BK4 (4 way)	3
BK6 (6 way)	2
BK12 (12 way)	1
MK 6/3	2
MK 6/4	2
MK 6/6	1
SAK 2.5	20
SAK 4	19
SAK 6N	15
SAK 10	12
SAK 16	10
SAK 35	7

Entrelec	
MA2.5/5	24
M4/6	20
M6/8	15
M10/10	12
M16/12	10
M35/16	7

Wago	
280-992	22
280-999	22
281-691	19
281-992	19
281-993	19
282-691	15
284-691	12
283-691	10
285-691	0
280-998	22
281-998	19
264-120	20
264-220	12
264-132(2)	4
264-134(4)	3
262-132(2)	4
264-134(4)	2

Drilling Envelope Dimensions (mm)

	Side A - C	Side B - D
Width	108	78
Height	65	58

Gland Entry Matrix *

Size	Side A - C	Side B - D
M16	6	2
M20	2	2
M25	2	1
M32	1	1
M40	0	0

* Using standard gland clearances

Specifications

Part Number	Material	Width (mm)	Length (mm)	Depth (mm)	Weight (g)
BPG8	GRP	160	160	90	1060
BPGC8	Carbon Loaded GRP	160	160	90	1060

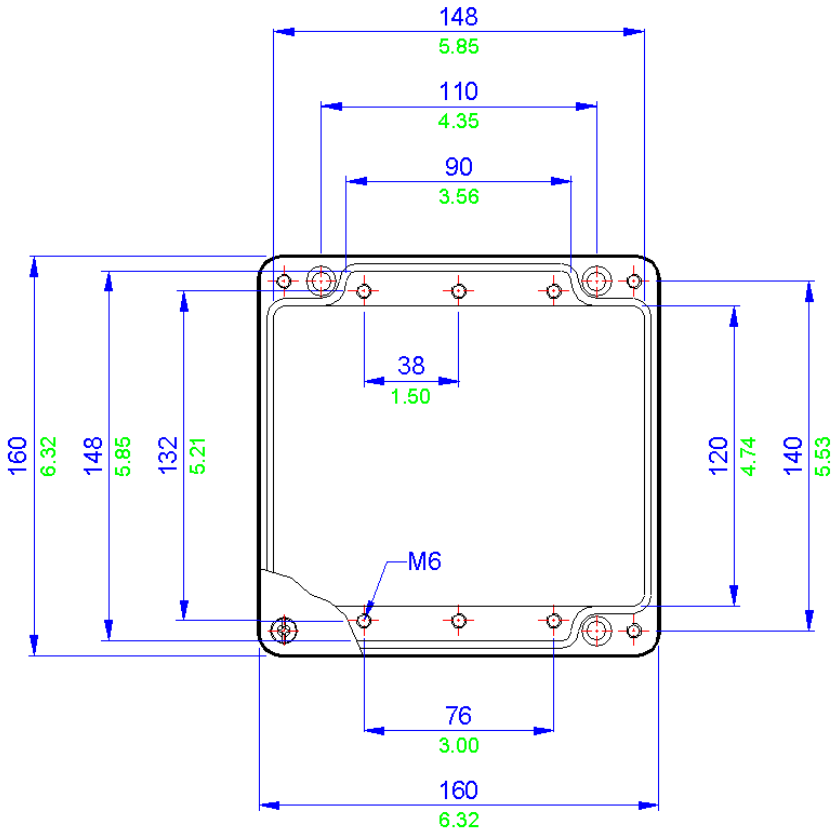

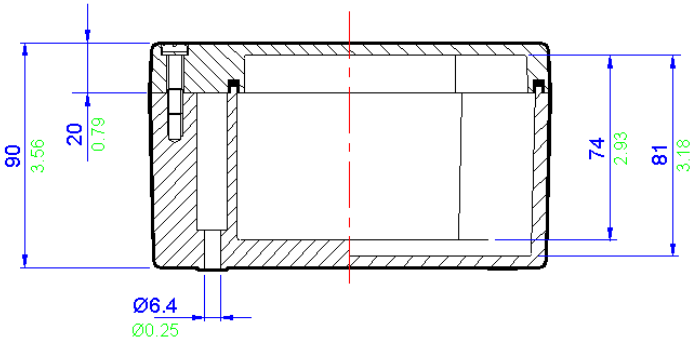

All **blue** dimensions in mm, all **green** dimensions in decimal inches (drawing not to scale)

BPG9 / BPGc9

Glass Reinforced Polyester Enclosures

IP66/7

Application
Hazardous and Industrial areas

Protection Degree
IP66 or 67

Certification
ATEX & IECEx (Zone 1 & 2; Zone 21 & 22)
TR CU
NEMA 4X (CSA, UL & FM) Class 1 Division 2

Material
Glass Reinforced Polyester (RAL7001 grey) or
Carbon Loaded Glass Reinforced Polyester (Black)

Temperature Rating
Hazardous Area: -65°C to +130°C
Non Hazardous: -70°C to +130°C

Power Rating
11.933W

Terminal Populations (Maximum Number of Rails = 1)

Calculations do not include the use of end stops, end plates and separators. Check that the enclosure can accommodate the cable bending radius and that the earth stud and entry location will permit the required number of terminals to be fitted

Weidmuller	
BK4 (4 way)	6
BK6 (6 way)	4
BK12 (12 way)	2
MK 6/3	4
MK 6/4	4
MK 6/6	3
SAK 2.5	36
SAK 4	34
SAK 6N	27
SAK 10	22
SAK 16	18
SAK 35	14

Entrelec	
MA2.5/5	43
M4/6	36
M6/8	27
M10/10	22
M16/12	18
M35/16	14

Wago	
280-992	40
280-999	40
281-691	34
281-992	34
281-993	34
282-691	27
284-691	21
283-691	18
285-691	0
280-998	40
281-998	34
264-120	36
264-220	21
264-132(2)	7
264-134(4)	5
262-132(2)	7
264-134(4)	5

Drilling Envelope Dimensions (mm)

	Side A - C	Side B - D
Width	210	80
Height	65	60

Gland Entry Matrix *

Size	Side A - C	Side B - D
M16	12	4
M20	6	2
M25	4	1
M32	3	1
M40	0	0

* Using standard gland clearances

Specifications

Part Number	Material	Width (mm)	Length (mm)	Depth (mm)	Weight (g)
BPG9	GRP	260	160	90	1170
BPGC9	Carbon Loaded GRP	260	160	90	1170

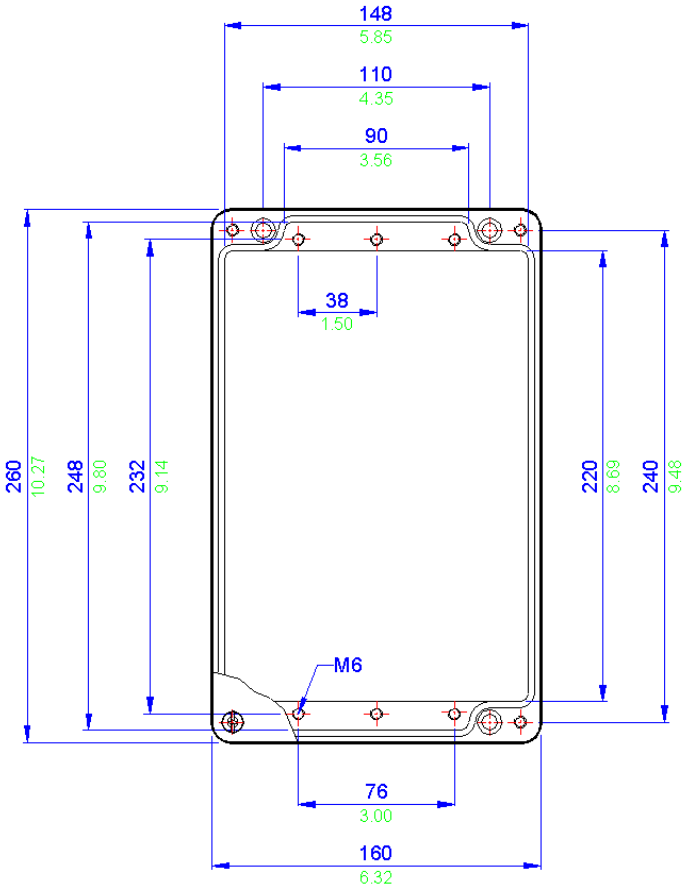

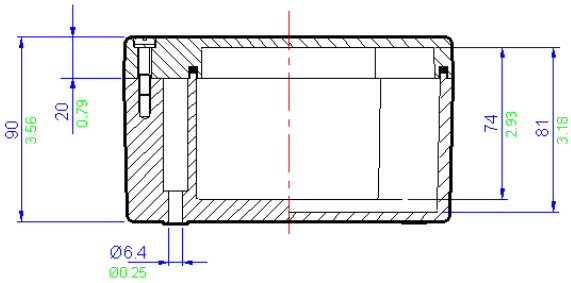

All **blue** dimensions in mm, all **green** dimensions in decimal inches (drawing not to scale)

BPG10 / BPGc10 Glass Reinforced Polyester Enclosures IP66/7

Application
Hazardous and Industrial areas

Protection Degree
IP66 or 67

Certification
ATEX & IECEx (Zone 1 & 2; Zone 21 & 22)
TR CU
NEMA 4X (CSA, UL & FM) Class 1 Division 2

Material
Glass Reinforced Polyester (RAL7001 grey) or
Carbon Loaded Glass Reinforced Polyester (Black)

Temperature Rating
Hazardous Area: -65°C to +130°C
Non Hazardous: -70°C to +130°C

Power Rating
13.793W

Terminal Populations (Maximum Number of Rails = 1)

Calculations do not include the use of end stops, end plates and separators. Check that the enclosure can accommodate the cable bending radius and that the earth stud and entry location will permit the required number of terminals to be fitted

Weidmuller	
BK4 (4 way)	9
BK6 (6 way)	6
BK12 (12 way)	3
MK 6/3	6
MK 6/4	6
MK 6/6	4
SAK 2.5	52
SAK 4	48
SAK 6N	40
SAK 10	32
SAK 16	26
SAK 35	20

Entrelec	
MA2.5/5	63
M4/6	52
M6/8	40
M10/10	32
M16/12	26
M35/16	20

Wago	
280-992	58
280-999	58
281-691	50
281-992	50
281-993	50
282-691	39
284-691	31
283-691	26
285-691	0
280-998	58
281-998	50
264-120	52
264-220	31
264-132(2)	11
264-134(4)	7
262-132(2)	10
264-134(4)	7

Drilling Envelope Dimensions (mm)

	Side A - C	Side B - D
Width	312	82
Height	65	60

Gland Entry Matrix *

Size	Side A - C	Side B - D
M16	18	4
M20	8	2
M25	6	1
M32	5	1
M40	0	0

* Using standard gland clearances

Specifications

Part Number	Material	Width (mm)	Length (mm)	Depth (mm)	Weight (g)
BPG10	GRP	360	160	90	2150
BPGC10	Carbon Loaded GRP	360	160	90	2150

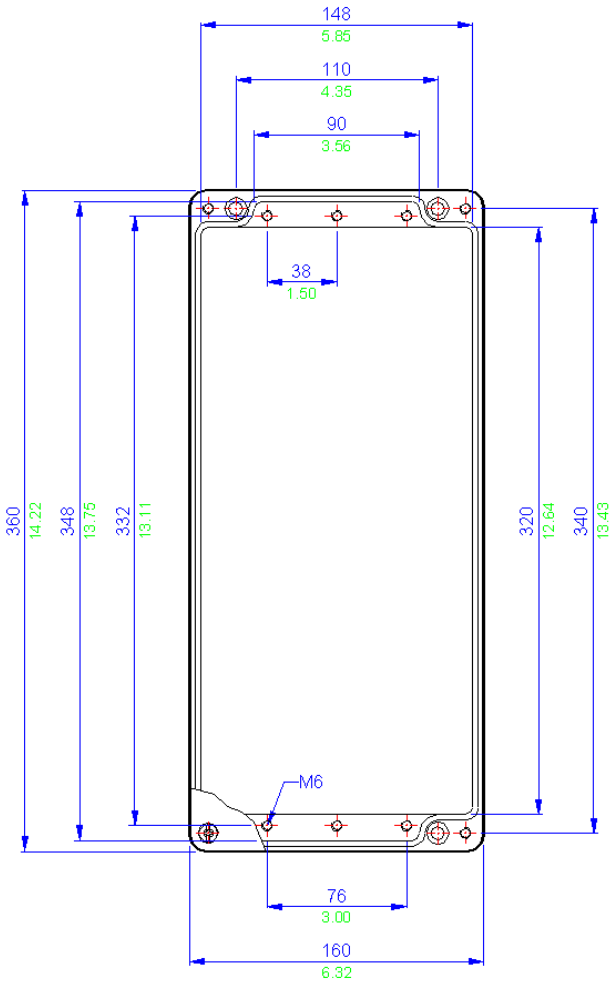

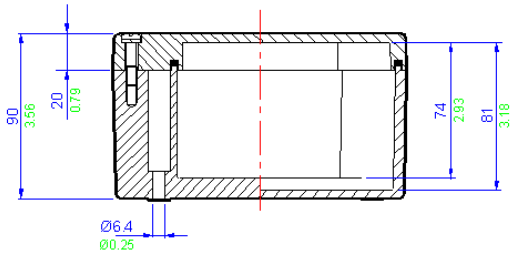

All **blue** dimensions in mm, all **green** dimensions in decimal inches (drawing not to scale)

BPG11 / BPGc11 Glass Reinforced Polyester Enclosures IP66/7

Application
Hazardous and Industrial areas

Protection Degree
IP66 or 67

Certification
ATEX & IECEx (Zone 1 & 2; Zone 21 & 22)
TR CU
NEMA 4X (CSA, UL & FM) Class 1 Division 2

Material
Glass Reinforced Polyester (RAL7001 grey) or Carbon Loaded Glass Reinforced Polyester (Black)

Temperature Rating
Hazardous Area: -65°C to +130°C
Non Hazardous: -70°C to +130°C

Power Rating
18.338W

Terminal Populations (Maximum Number of Rails = 1)

Calculations do not include the use of end stops, end plates and separators. Check that the enclosure can accommodate the cable bending radius and that the earth stud and entry location will permit the required number of terminals to be fitted

Weidmuller	
BK4 (4 way)	14
BK6 (6 way)	10
BK12 (12 way)	5
MK 6/3	11
MK 6/4	11
MK 6/6	7
SAK 2.5	85
SAK 4	78
SAK 6N	64
SAK 10	51
SAK 16	43
SAK 35	32

Entrelec	
MA2.5/5	101
M4/6	85
M6/8	64
M10/10	51
M16/12	43
M35/16	32

Wago	
280-992	96
280-999	96
281-691	82
281-992	82
281-993	82
282-691	63
284-691	51
283-691	42
285-691	0
280-998	96
281-998	82
264-120	85
264-220	51
264-132(2)	18
264-134(4)	12
262-132(2)	17
264-134(4)	12

Drilling Envelope Dimensions (mm)

	Side A - C	Side B - D
Width	242	80
Height	65 (x2)	60

Gland Entry Matrix *

Size	Side A - C	Side B - D
M16	28	4
M20	12	2
M25	10	1
M32	8	1
M40	0	0

* Using standard gland clearances

Specifications

Part Number	Material	Width (mm)	Length (mm)	Depth (mm)	Weight (g)
BPG11	GRP	560	160	90	3200
BPGC11	Carbon Loaded GRP	560	160	90	3200

Technical Drawing

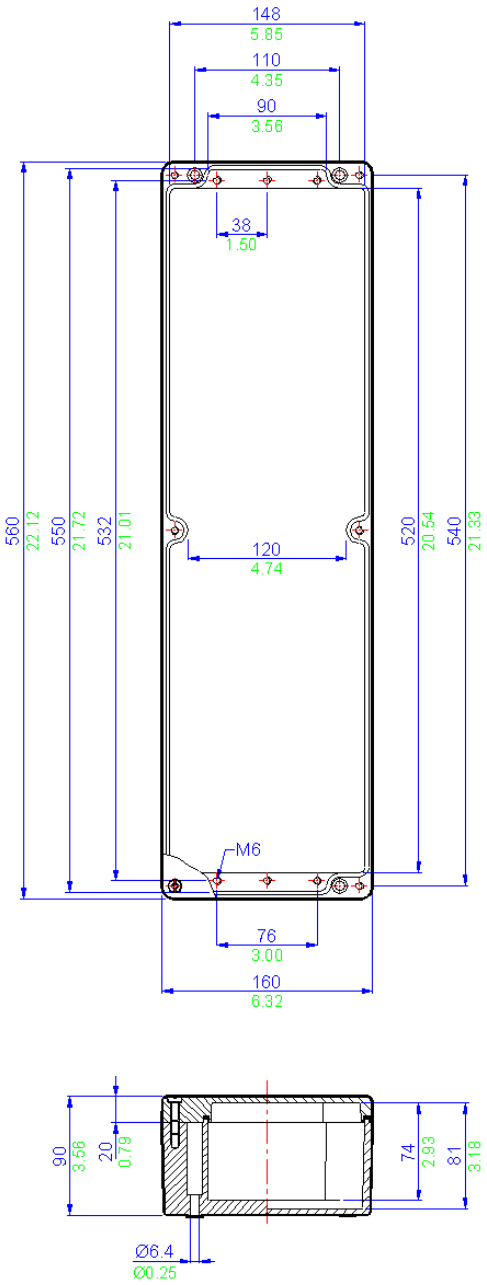

All **blue** dimensions in mm, all **green** dimensions in decimal inches (drawing not to scale)

BPG12 / BPGc12 Glass Reinforced Polyester Enclosures IP66/7

Application
Hazardous and Industrial areas

Protection Degree
IP66 or 67

Certification
ATEX & IECEx (Zone 1 & 2; Zone 21 & 22)
TR CU
NEMA 4X (CSA, UL & FM) Class 1 Division 2

Material
Glass Reinforced Polyester (RAL7001 grey) or
Carbon Loaded Glass Reinforced Polyester
(Black)

Temperature Rating
Hazardous Area: -65°C to +130°C
Non Hazardous: -70°C to +130°C

Power Rating
15.474W

Terminal Populations (Maximum Number of Rails = 2)

Calculations do not include the use of end stops, end plates and separators. Check that the enclosure can accommodate the cable bending radius and that the earth stud and entry location will permit the required number of terminals to be fitted

Weidmuller	
BK4 (4 way)	12
BK6 (6 way)	8
BK12 (12 way)	4
MK 6/3	8
MK 6/4	8
MK 6/6	6
SAK 2.5	70
SAK 4	66
SAK 6N	54
SAK 10	42
SAK 16	36
SAK 35	20

Entrelec	
MA2.5/5	84
M4/6	70
M6/8	54
M10/10	42
M16/12	36
M35/16	26

Wago	
280-992	78
280-999	78
281-691	66
281-992	66
281-993	66
282-691	52
284-691	42
283-691	17
285-691	12
280-998	78
281-998	66
264-120	70
264-220	42
264-132(2)	14
264-134(4)	10
262-132(2)	14
264-134(4)	8

Drilling Envelope Dimensions (mm)

	Side A - C	Side B - D
Width	205	170
Height	90	85

Gland Entry Matrix *

Size	Side A - C	Side B - D
M16	15	12
M20	10	8
M25	6	4
M32	3	2
M40	3	2

* Using standard gland clearances

Specifications

Part Number	Material	Width (mm)	Length (mm)	Depth (mm)	Weight (g)
BPG12	GRP	255	250	120	3200
BPGC12	Carbon Loaded GRP	255	250	120	3200

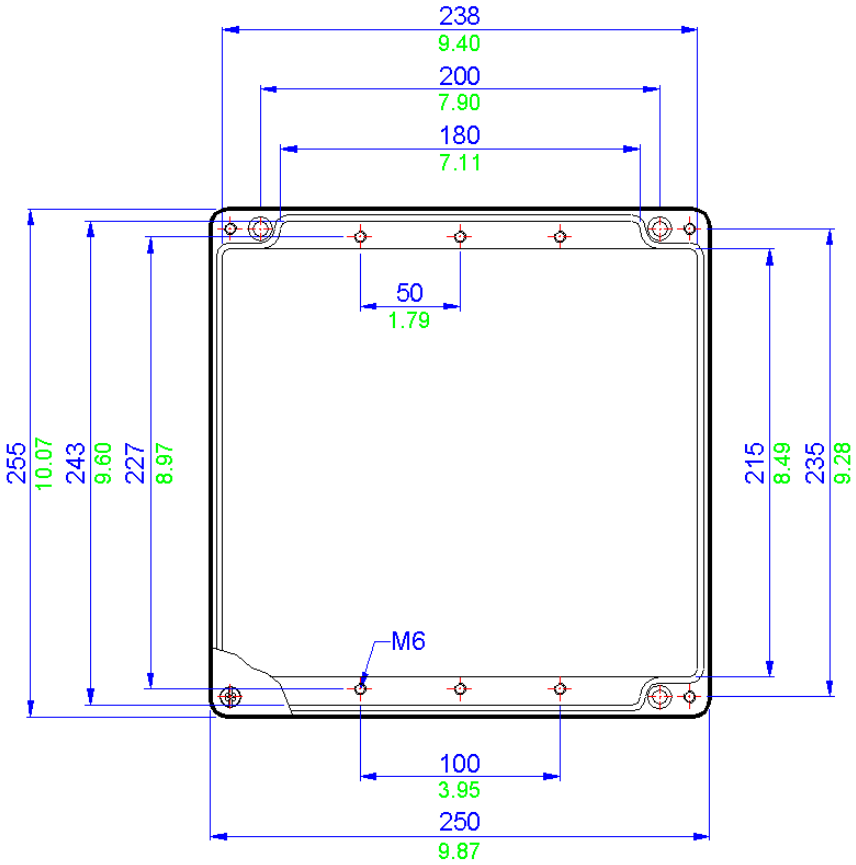

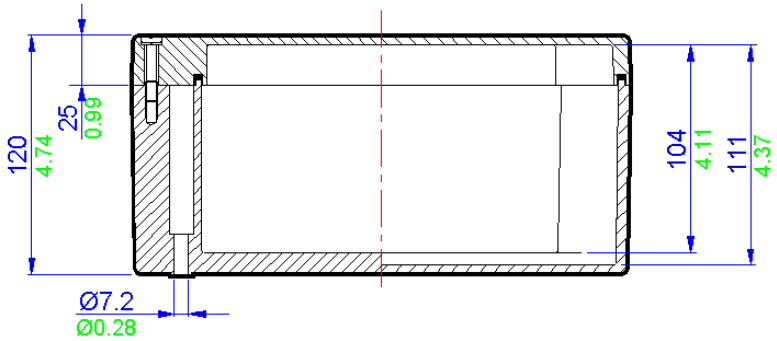

All **blue** dimensions in mm, all **green** dimensions in decimal inches (drawing not to scale)

BPG13 / BPGc13 Glass Reinforced Polyester Enclosures IP66/7

Application
Hazardous and Industrial areas

Protection Degree
IP66 or 67

Certification
ATEX & IECEx (Zone 1 & 2; Zone 21 & 22)
TR CU
NEMA 4X (CSA, UL & FM) Class 1 Division 2

Material
Glass Reinforced Polyester (RAL7001 grey) or
Carbon Loaded Glass Reinforced Polyester (Black)

Temperature Rating
Hazardous Area: -65°C to +130°C
Non Hazardous: -70°C to +130°C

Power Rating
20.867W

Terminal Populations (Maximum Number of Rails = 2)

Calculations do not include the use of end stops, end plates and separators. Check that the enclosure can accommodate the cable bending radius and that the earth stud and entry location will permit the required number of terminals to be fitted

Weidmuller	
BK4 (4 way)	20
BK6 (6 way)	14
BK12 (12 way)	6
MK 6/3	14
MK 6/4	14
MK 6/6	10
SAK 2.5	118
SAK 4	108
SAK 6N	88
SAK 10	72
SAK 16	60
SAK 35	36

Entrelec	
MA2.5/5	140
M4/6	118
M6/8	88
M10/10	72
M16/12	60
M35/16	44

Wago	
280-992	132
280-999	132
281-691	114
281-992	114
281-993	114
282-691	88
284-691	70
283-691	29
285-691	20
280-998	132
281-998	114
264-120	118
264-220	70
264-132(2)	24
264-134(4)	16
262-132(2)	24
264-134(4)	16

Drilling Envelope Dimensions (mm)

	Side A - C	Side B - D
Width	350	170
Height	89	84

Gland Entry Matrix *

Size	Side A - C	Side B - D
M16	30	12
M20	16	8
M25	14	4
M32	6	2
M40	5	2

* Using standard gland clearances

Specifications

Part Number	Material	Width (mm)	Length (mm)	Depth (mm)	Weight (g)
BPG13	GRP	400	250	120	3650
BPGC13	Carbon Loaded GRP	400	250	120	3650

Technical Drawing

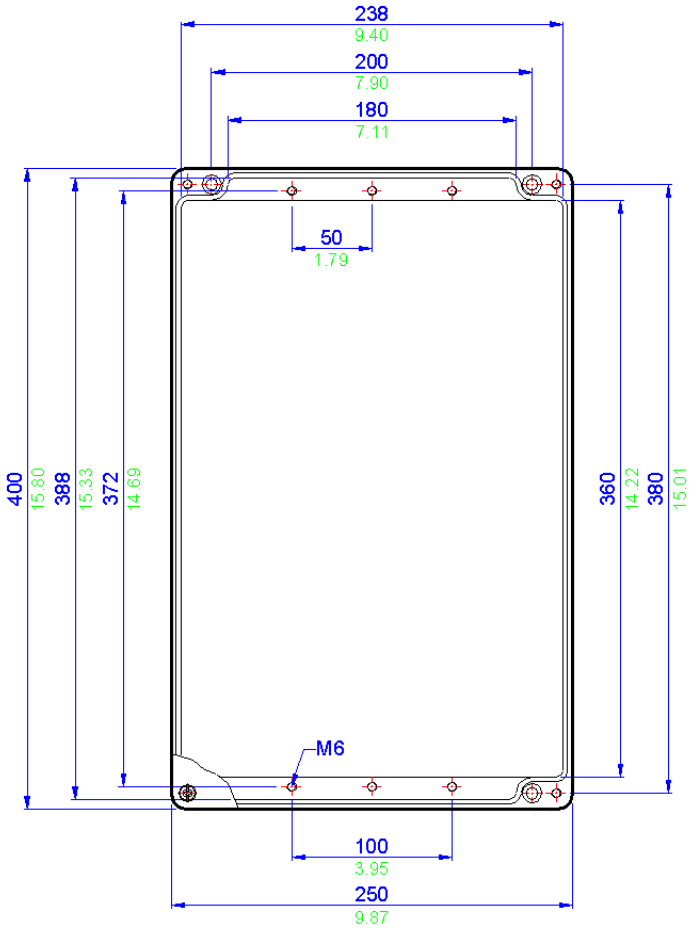

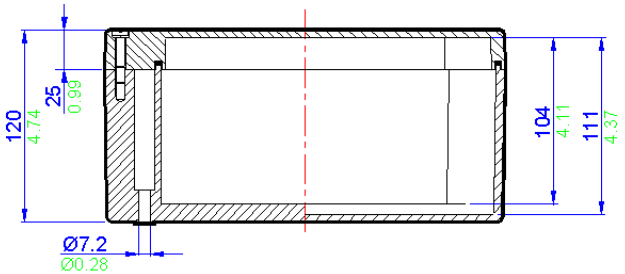

All **blue** dimensions in mm, all **green** dimensions in decimal inches (drawing not to scale)

BPG13.5 / BPGc13.5 Glass Reinforced Polyester Enclosures IP66/7

Application
Hazardous and Industrial areas

Protection Degree
IP66 or 67

Certification
ATEX & IECEx (Zone 1 & 2; Zone 21 & 22)
TR CU
NEMA 4X (CSA, UL & FM) Class 1 Division 2

Material
Glass Reinforced Polyester (RAL7001 grey) or
Carbon Loaded Glass Reinforced Polyester (Black)

Temperature Rating
Hazardous Area: -65°C to +130°C
Non Hazardous: -70°C to +130°C

Power Rating
20.867W

Terminal Populations (Maximum Number of Rails = 2)

Calculations do not include the use of end stops, end plates and separators. Check that the enclosure can accommodate the cable bending radius and that the earth stud and entry location will permit the required number of terminals to be fitted

Weidmuller		Entrelec		Wago	
BK4 (4 way)	20	MA2.5/5	140	280-992	132
BK6 (6 way)	14	M4/6	118	280-999	132
BK12 (12 way)	6	M6/8	88	281-691	114
MK 6/3	14	M10/10	72	281-992	114
MK 6/4	14	M16/12	60	281-993	114
MK 6/6	10	M35/16	44	282-691	88
SAK 2.5	118			284-691	70
SAK 4	108			283-691	29
SAK 6N	88			285-691	20
SAK 10	72			280-998	132
SAK 16	60			281-998	114
SAK 35	36			264-120	118
				264-220	70
				264-132(2)	24
				264-134(4)	16
				262-132(2)	24
				264-134(4)	16

Drilling Envelope Dimensions (mm)

	Side A - C	Side B - D
Width	350	170
Height	89	84

Gland Entry Matrix *

Size	Side A - C	Side B - D
M16	30	12
M20	16	8
M25	14	4
M32	6	2
M40	5	2

* Using standard gland clearances

Specifications

Part Number	Material	Width (mm)	Length (mm)	Depth (mm)	Weight (g)
BPG13.5	GRP	400	250	160	4872
BPGC13.5	Carbon Loaded GRP	400	250	160	4872

Technical Drawing

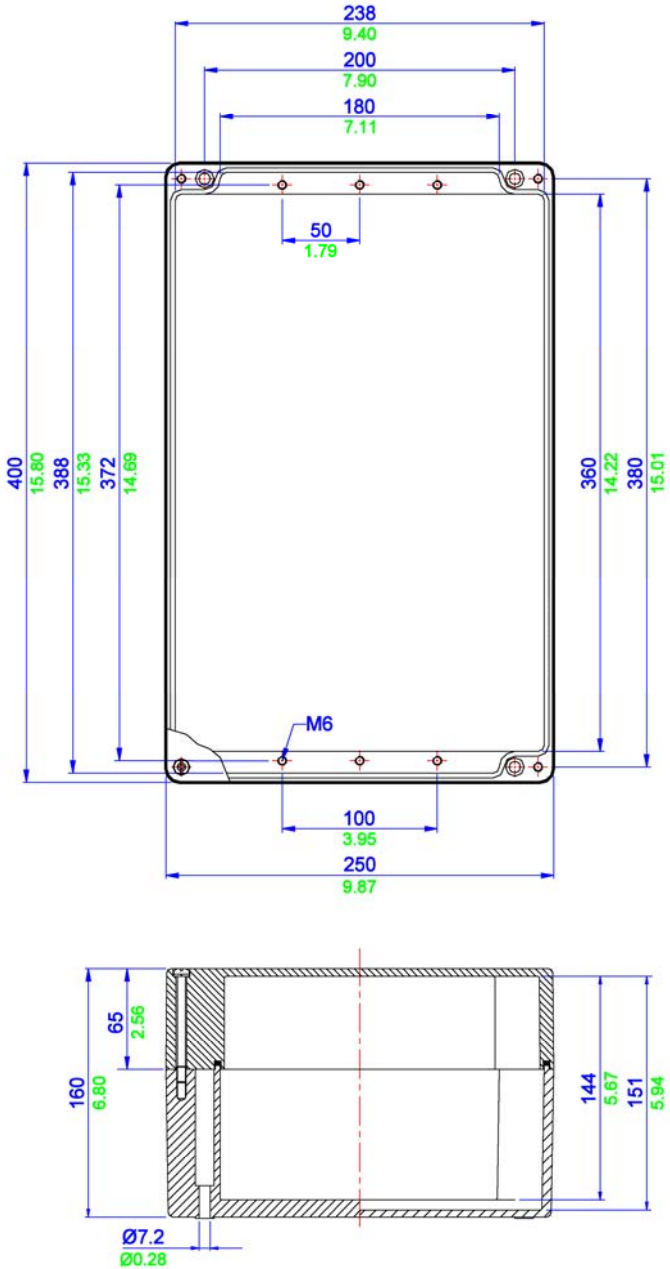

All **blue** dimensions in mm, all **green** dimensions in decimal inches (drawing not to scale)

BPG14 / BPGc14 Glass Reinforced Polyester Enclosures IP66/7

Application
Hazardous and Industrial areas

Protection Degree
IP66 or 67

Certification
ATEX & IECEx (Zone 1 & 2; Zone 21 & 22)
TR CU
NEMA 4X (CSA, UL & FM) Class 1 Division 2

Material
Glass Reinforced Polyester (RAL7001 grey) or
Carbon Loaded Glass Reinforced Polyester
(Black)

Temperature Rating
Hazardous Area: -65°C to +130°C
Non Hazardous: -70°C to +130°C

Power Rating
30.384W

Terminal Populations (Maximum Number of Rails = 2)

Calculations do not include the use of end stops, end plates and separators. Check that the enclosure can accommodate the cable bending radius and that the earth stud and entry location will permit the required number of terminals to be fitted

Weidmuller		Entrelec		Wago	
BK4 (4 way)	30	MA2.5/5	218	280-992	132
BK6 (6 way)	22	M4/6	182	280-999	132
BK12 (12 way)	12	M6/8	138	281-691	114
MK 6/3	22	M10/10	110	281-992	114
MK 6/4	22	M16/12	92	281-993	114
MK 6/6	14	M35/16	70	282-691	88
SAK 2.5	182			284-691	70
SAK 4	168			283-691	29
SAK 6N	138			285-691	20
SAK 10	110			280-998	132
SAK 16	92			281-998	114
SAK 35	70			264-120	118
				264-220	70
				264-132(2)	24
				264-134(4)	16
				262-132(2)	24
				264-134(4)	16

Drilling Envelope Dimensions (mm)

	Side A - C	Side B - D
Width	260	168
Height	90 (x2)	85

Gland Entry Matrix *

Size	Side A - C	Side B - D
M16	42	12
M20	24	8
M25	20	4
M32	8	2
M40	6	2

* Using standard gland clearances

Specifications

Part Number	Material	Width (mm)	Length (mm)	Depth (mm)	Weight (g)
BPG14	GRP	600	250	120	5235
BPGC14	Carbon Loaded GRP	600	250	120	5235

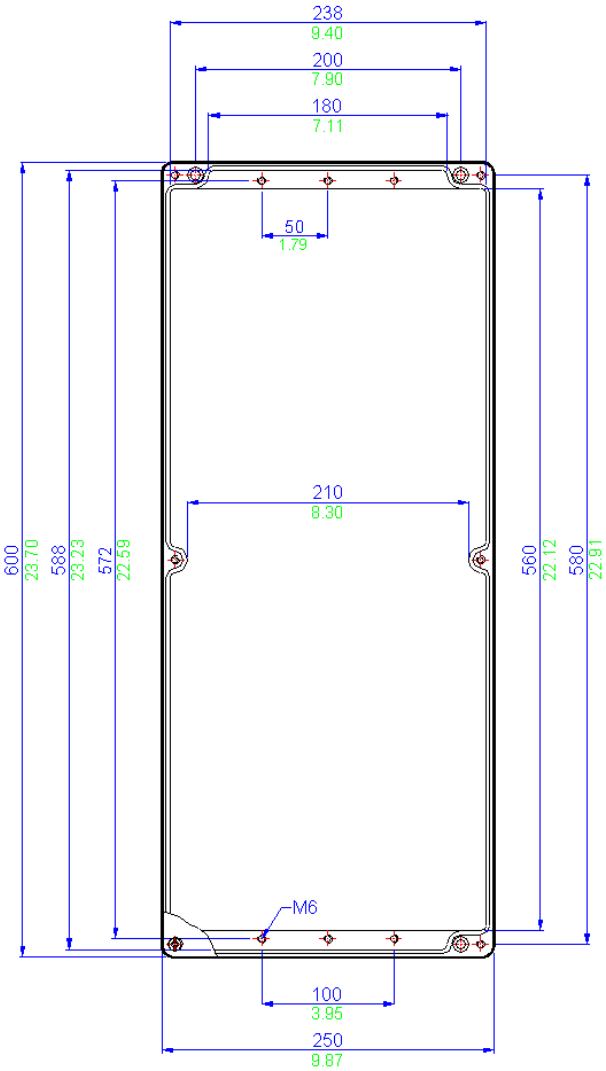

All **blue** dimensions in mm, all **green** dimensions in decimal inches (drawing not to scale)

BPG15 / BPGc15 Glass Reinforced Polyester Enclosures IP66/7

Application
Hazardous and Industrial areas

Protection Degree
IP66 or 67

Certification
ATEX & IECEx (Zone 1 & 2; Zone 21 & 22)
TR CU
NEMA 4X (CSA, UL & FM) Class 1 Division 2

Material
Glass Reinforced Polyester (RAL7001 grey) or
Carbon Loaded Glass Reinforced Polyester (Black)

Temperature Rating
Hazardous Area: -65°C to +130°C
Non Hazardous: -70°C to +130°C

Power Rating
31.350W

Terminal Populations (Maximum Number of Rails = 3)

Calculations do not include the use of end stops, end plates and separators. Check that the enclosure can accommodate the cable bending radius and that the earth stud and entry location will permit the required number of terminals to be fitted

Weidmuller	
BK4 (4 way)	30
BK6 (6 way)	21
BK12 (12 way)	9
MK 6/3	21
MK 6/4	21
MK 6/6	15
SAK 2.5	177
SAK 4	162
SAK 6N	132
SAK 10	108
SAK 16	90
SAK 35	66

Entrelec	
MA2.5/5	210
M4/6	177
M6/8	132
M10/10	108
M16/12	90
M35/16	66

Wago	
280-992	198
280-999	198
281-691	171
281-992	171
281-993	171
282-691	132
284-691	105
283-691	58
285-691	40
280-998	198
281-998	171
264-120	177
264-220	101
264-132(2)	36
264-134(4)	24
262-132(2)	36
264-134(4)	24

Drilling Envelope Dimensions (mm)

	Side A - C	Side B - D
Width	352	327
Height	89	84

Gland Entry Matrix *

Size	Side A - C	Side B - D
M16	30	24
M20	18	16
M25	14	10
M32	6	5
M40	5	4

* Using standard gland clearances

Specifications

Part Number	Material	Width (mm)	Length (mm)	Depth (mm)	Weight (g)
BPG15	GRP	400	405	120	5580
BPGC15	Carbon Loaded GRP	400	405	120	5580

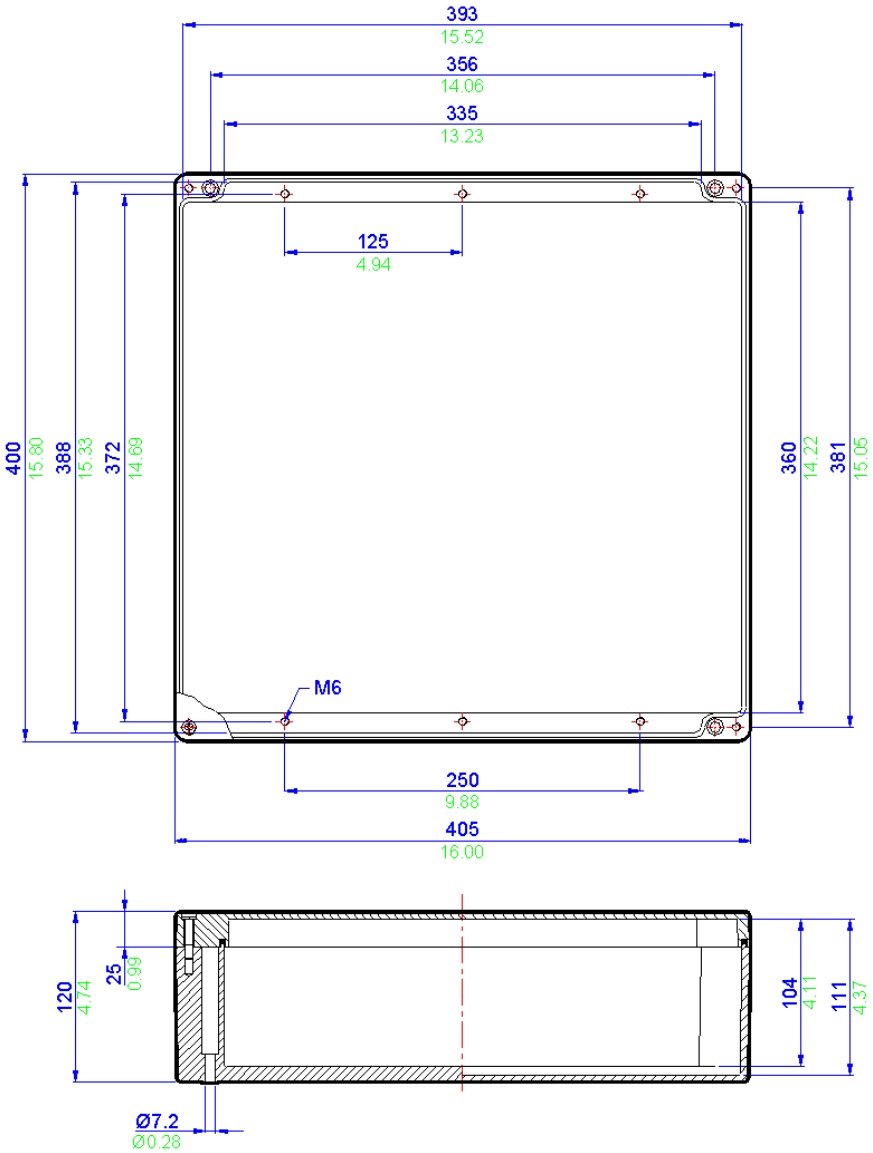

All **blue** dimensions in mm, all **green** dimensions in decimal inches (drawing not to scale)

1
2
3

BPGA

The ABTECH BPGA range comprises of three types of BPG enclosure in two different sizes. These enclosures are available pre-assembled and are readily available from stock. The BPGA enclosures are ideal for a range of uses such as lighting, power and instrument junction boxes.

These enclosures are manufactured in impact resistant glass-reinforced polyester which has an ingress protection rating of IP66/67 and are Shell/ERA deluge tested.

The enclosures come equipped with terminals as shown in the specification table for each individual box, copper earth continuity plate and are also fitted with a brass M6 internal/external earth stud.

Each enclosure comes pre-drilled with four M20 tapped cable entries and is supplied with EEx'e' certified blanking plugs. The BPGA range of enclosures are also ATEX certified EEx'e' and are suitable for use in Category 2/Zone 1 and Category 3/ Zone 2 areas according to EN 60079-14 with a working ambient temperature of between -20°C and +40°C (-4°F to 104°F).

As an option, we are also able to supply a post mounting bracket, allowing the user to install the BPGA range onto posts measuring between 50 and 100mm in diameter. All bracket components are manufactured from stainless steel, ensuring an extremely long life span even in harsh environmental conditions. Please contact the Sales Department for further details.

Application
Industrial and Hazardous areas

Protection Degree
IP66 or 67

Certification
ATEX EEx e (Zone 1 & Zone 2) to BS EN 50019
ATEX EEx nA (Zone 2) to BS EN 50021 (Zone 2)
NEMA 4X (CSA, UL & FM) Class 1 Division 2
Deluge Test to DTS-01
IEC Ex

Material
Glass Reinforced Polyester (RAL7001 grey)

Temperature Rating
Neoprene gasket: -20º to 40º C (-4º to 104º F)

Power Rating
9.378W

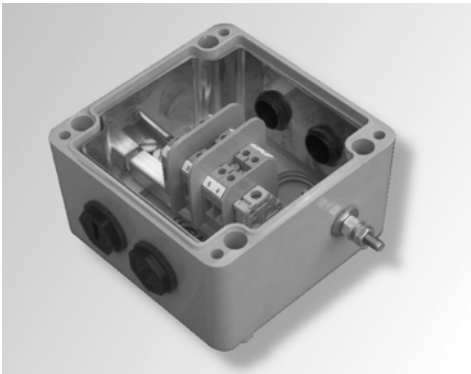

Fitted Components

Entries	Blanking Plugs	Terminals	Earth Continuity Plate	Earth Stud
4 x M20 (2 x Side A, 2 x Side C)	4 off (EEx'e' rated)	6 x SAK 2.5 (linked in pairs)	Yes (Copper)	Yes (Brass, M6)

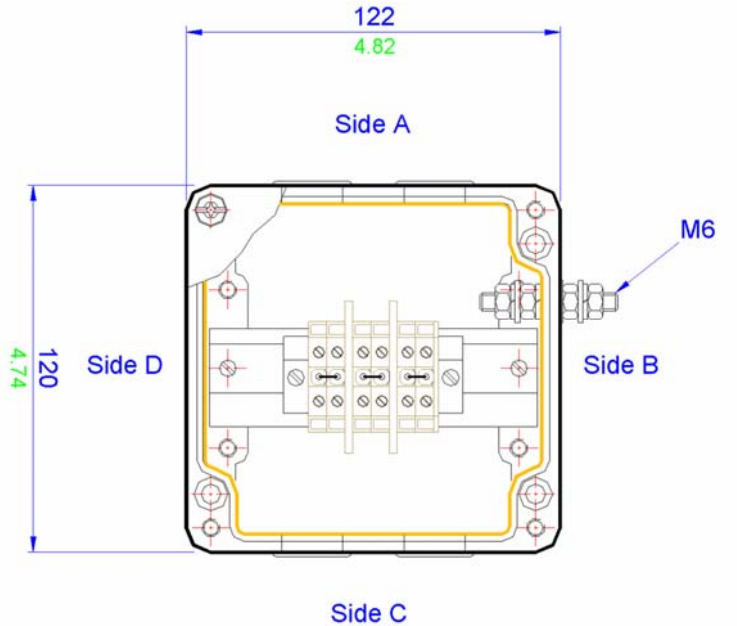

All **blue** dimensions in mm, all **green** dimensions in decimal inches (drawing not to scale)

Specifications

Part Number	Material	Width (mm)	Length (mm)	Depth (mm)	Weight (g)
BPG120	GRP	122	120	90	1140

BPGA125

Glass Reinforced Polyester Junction Boxes

IP66/7

Application
Industrial and Hazardous areas

Protection Degree
IP66 or 67

Certification
ATEX EEx e (Zone 1 & Zone 2) to BS EN 50019
ATEX EEx nA (Zone 2) to BS EN 50021 (Zone 2)
NEMA 4X (CSA, UL & FM) Class 1 Division 2
Deluge Test to DTS-01
IEC Ex

Material
Glass Reinforced Polyester (RAL7001 grey)

Temperature Rating
Neoprene gasket: -20° to 40° C (-4° to 104° F)

Power Rating
9.378W

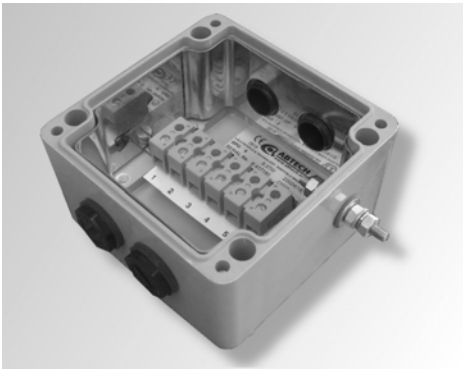

Fitted Components

Entries	Blanking Plugs	Terminals	Earth Continuity Plate	Earth Stud
4 x M20 (2 x Side A, 2 x Side C)	4 off (EEx'e' rated)	1 x MK6/6 way (linked in pairs)	Yes (Copper)	Yes (Brass, M6)

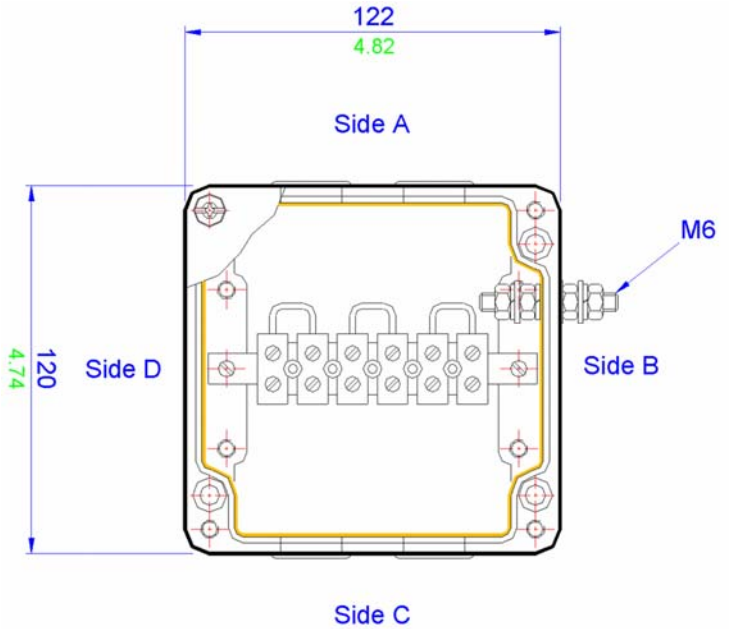

All **blue** dimensions in mm, all **green** dimensions in decimal inches (drawing not to scale)

Specifications

Part Number	Material	Width (mm)	Length (mm)	Depth (mm)	Weight (g)
BPG125	GRP	122	120	90	1062

Application
Industrial and Hazardous areas

Protection Degree
IP66 or 67

Certification
ATEX EEx e (Zone 1 & Zone 2) to BS EN 50019
ATEX EEx nA (Zone 2) to BS EN 50021 (Zone 2)
NEMA 4X (CSA, UL & FM) Class 1 Division 2
Deluge Tested to DTS-01
IEC Ex

Material
Glass Reinforced Polyester (RAL7001 grey)

Temperature Rating
Neoprene gasket: -20º to 40º C (-4º to 104º F)

Power Rating
10.348W

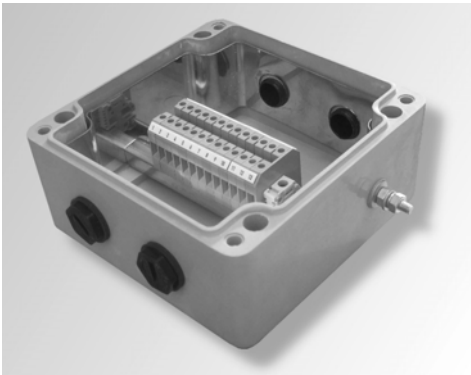

Fitted Components

Entries	Blanking Plugs	Terminals	Earth Continuity Plate	Earth Stud
4 x M20 (2 x Side A, 2 x Side C)	4 off (EEx'e' rated)	13 x SAK 2.5	Yes (Copper)	Yes (Brass, M6)

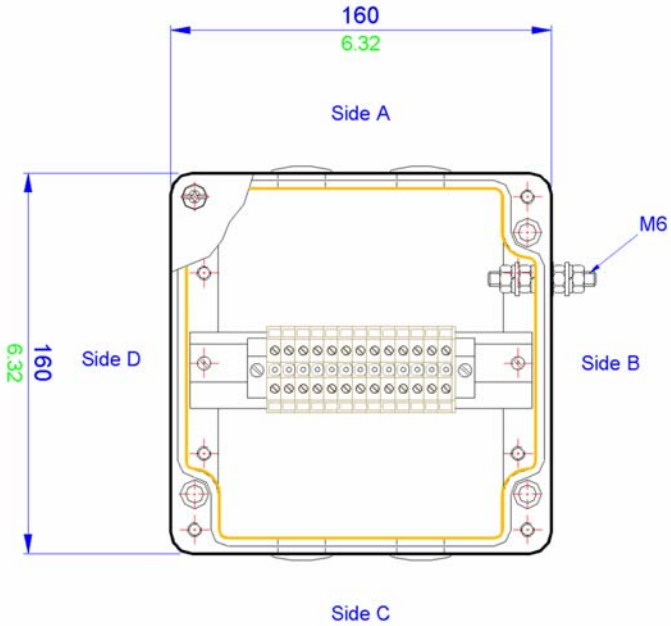

All **blue** dimensions in mm, all **green** dimensions in decimal inches (drawing not to scale)

Specifications

Part Number	Material	Width (mm)	Length (mm)	Depth (mm)	Weight (g)
BPG160	GRP	160	160	90	1740

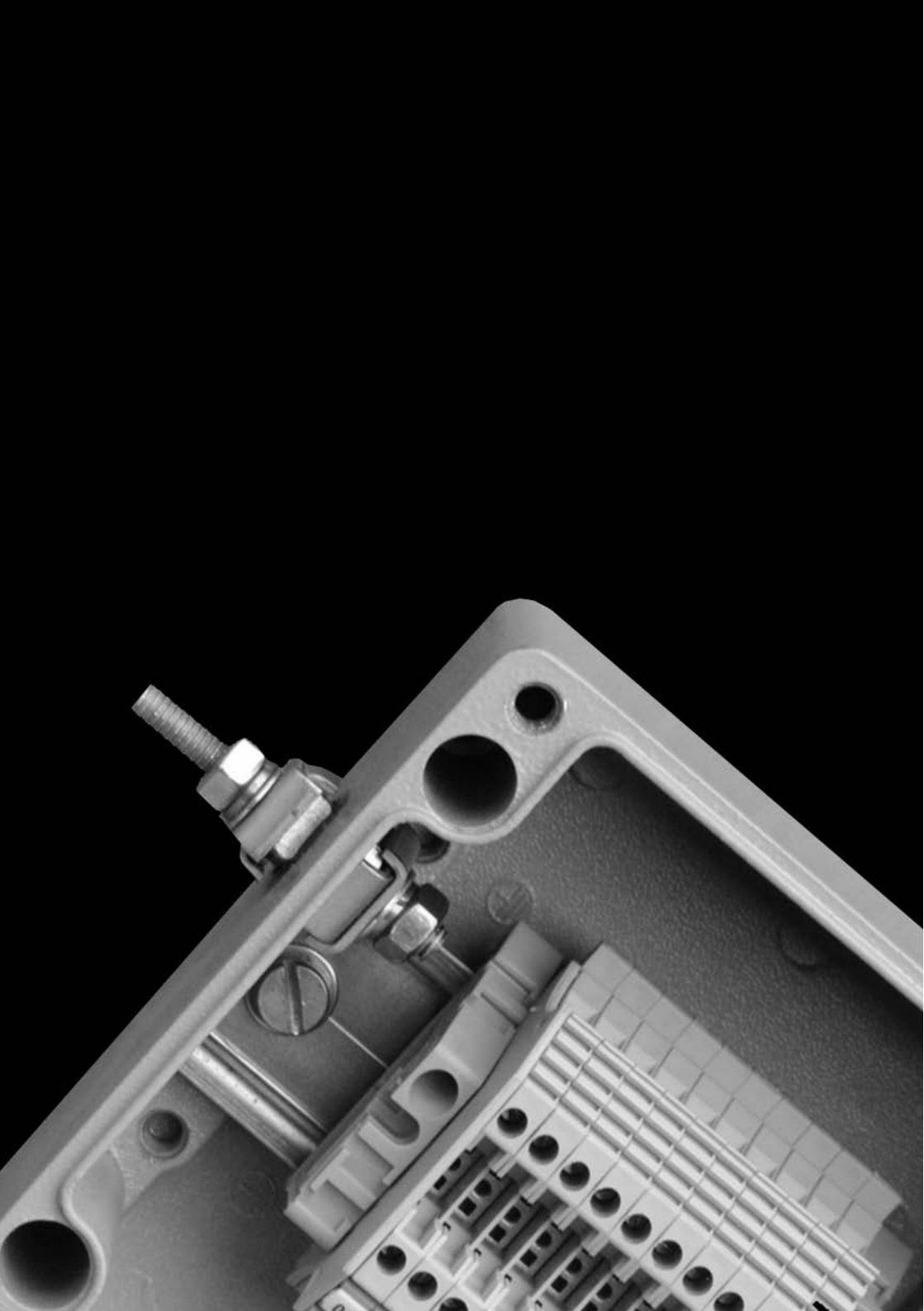

ZAG

The ZAG range of enclosures comprises of 19 different sizes of enclosures and is precision die cast in AL-Si 12 grade (LM24) aluminium alloy. This is considered to be the most suitable grade of aluminium for maximum corrosion resistance especially in salt laden atmospheres.
Additional optional protection methods such as alochrome, anodising and epoxy polyester painting coupled with the fitment of captive 316 grade stainless steel lid retaining screws further enhance the anti-corrosion properties of the enclosure.

The wall thickness is sufficient to allow tapped entry holes to be machined into the walls or the base of the enclosure.

Due to the enclosure's labyrinth seal system, similar to that of the BPG range of enclosures, whereby the seal is protected from external forces, the ZAG enclosure has excellent ingress protection qualities this means that the enclosure has been tested to and passed IP65/66/67.

The mounting holes, although contained within the profile of the enclosure, sit outside the seal and all the external fasteners and fixings are manufactured from 316 grade stainless steel to ensure the enclosures reliability. External stainless steel mounting feet are offered as an option.

The ZAG range has many features which lend itself to a whole host of applications including junction boxes, both industrial and hazardous area, and especially OEM applications, where the excellent machining qualities of aluminium come to the fore.

The ZAG range can be drilled and tapped with various thread forms and it readily accepts most paint finishes and colours.

The ZAG range is particularly suitable for the engraving of instructions and decals and this method provides excellent durability. Silk screen printing is also available.

All of this can be achieved even in relatively small batches which makes the ZAG range ideal for the small to medium size manufacturers who can achieve a custom enclosure economically.

Earthing of the enclosure can be accomplished by various means. Internal / external stainless steel earth studs which in turn can be connected to the terminal mounting rail or component plate and various rail mounted earth terminals or proprietary earth bars can be fitted inside the enclosure. Due to the fact that aluminium is an excellent conductor, earthing for cable glands is provided through contact with the enclosure wall with no further earthing required.

The ZAG range is suitable for a wide range of ambient conditions. Hazardous Area certified enclosures are suitable for -65°C to + 150°C (-85°F to +302°F). Please refer to the relevant Ex certificate for full details.

The ZAG enclosures are suitable for use in hazardous areas and can be supplied with a number of certificates:

ATEX and IECEx:

- Ex ia (Zone 0) and Ex ta (Zone 20)
- Ex e Ex ib (Zone 1) and Ex tb (Zone 21)
- Ex nA (Zone 2) and Ex tc (Zone 22)

CSA Ex e (Class 1, Zone 1)

FM AEx e (Class 1, Zone 1)

TYPE 4X (CSA, FM, UL)

TR CU

ZAG Range Features

- Wide Operating Temperature (- 65°C to +150°C) (-85°F to +302°F)
- Ingress Protection up to IP67
- Painted and Unpainted versions
- Impact Resistant > 7 Nm
- Corrosion Resistant
- Can be drilled and tapped to accommodate most thread forms (NPT for example)
- Certification for use in Zone 1 and 2
- UL, CSA, IEC Ex, ATEX, FM, InMetro and TR CU Approvals
- Ideal for Petrochemical and Marine applications

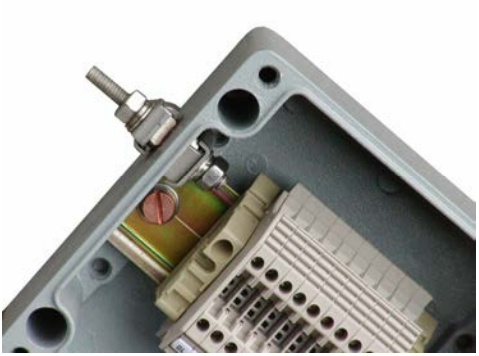

Accessories and Options

The following table is a list of the available accessories suitable for particular standard sizes of ZAG enclosures. Care should be taken when ordering accessories for use with enclosures intended for hazardous areas to ensure that compliance with certification is retained.

Part Number	Width (mm)	Height (mm)	Depth (mm)	**UP** - Unpainted	**EX** - Ex Certified (see note 1)	**AL** - Alochromed	**ES** - Earth Stud	**AS** - Allen Head Fixing Screws	**TP** - Tamper Proof Screws	**EH** - External Hinges	**MP** - Component Mounting Plate	**MF** - External Mounting Feet	**EB** - Internal Earthing Bar	**MR** - DIN Standard Mounting Rail	**RF** - RFI Protection (see note 3)
ZAG1	50	45	30	●		●		●	●						●
ZAG2	58	64	34	●	●			●	●		●				●
ZAG3	98	64	34	●	●	●	●	●	●		●				●
ZAG4	150	64	34	●	●	●	●	●	●		●	●			●
ZAG5	75	80	57	●	●	●	●	●	●	●	●	●		●	●
ZAG6	125	80	57	●	●		●	●	●	●	●	●		●	●
ZAG7	175	80	57	●	●	●	●	●	●	●	●	●		●	●
ZAG8	250	80	56	●	●	●	●	●	●	●	●	●		●	●
ZAG9	122	120	80	●	●	●	●	●	●	●	●	●	●	●	●
ZAG9/9	122	120	90	●	●	●	●	●	●	●	●	●	●	●	●
ZAG10	220	120	80	●	●	●	●	●	●	●	●	●	●	●	●
ZAG10/9	220	120	90	●	●	●	●	●	●	●	●	●	●	●	●
ZAG11	160	160	90	●	●	●	●	●	●	●	●	●	●	●	●
ZAG12	260	160	90	●	●	●	●	●	●	●	●	●	●	●	●
ZAG13	360	160	90	●	●	●	●	●	●	●	●	●	●	●	●
ZAG14	560	160	90	●	●	●	●	●	●	●	●	●	●	●	●
ZAG15	202	230	110	●	●	●	●	●	●	●	●	●	●	●	●
ZAG16	330	230	110	●	●	●	●	●	●	●	●	●	●	●	●
ZAG21	120	360	80	●	●	●	●	●	●	●	●	●	●	●	●

Ordering Example;

ZAG10 UP AS

(ZAG 10 unpainted, Allen Head Fixing Screws)

1. EEx'e' certification may be component or apparatus certified - please specify your requirements.
2. Radio Frequency Interference (RFI) gasket may reduce IP rating. Enclosure may also be internally coated with RFI material.

Unpainted (raw) finish

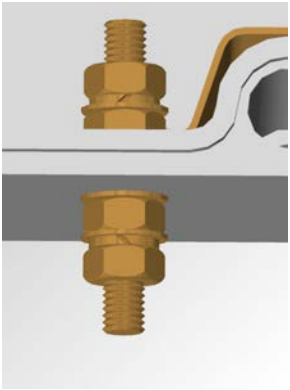

Earth Stud
(either brass or stainless steel)

Allen Head fixing screws
(grade 316)

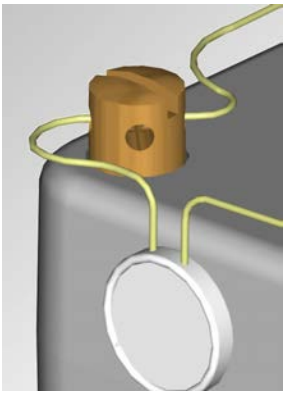

Tamper-proof screws

External hinges

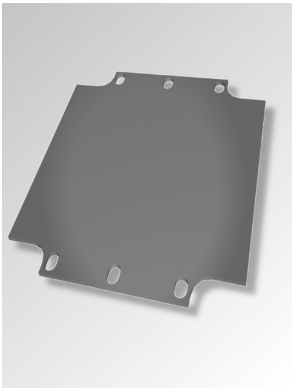

Component mounting plate
(tufnol as standard, steel an option)

External mounting feet (stainless steel 316)

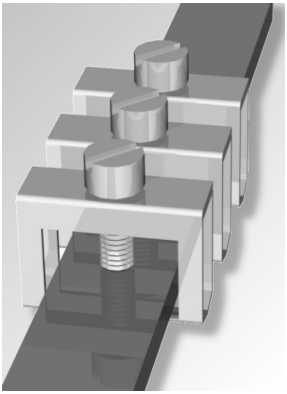

Internal Earthing bar
(can be fitted with clamps)

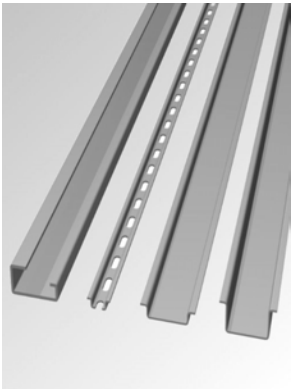

DIN standard mounting rail
(TS15, TS32 or TS35)

ZAG1 / ZAG1R

Die Cast Aluminium Enclosures

IP65

Application
Industrial areas

Protection Degree
IP65

Certification
Not applicable

Material
Precision Cast AlSI12 (LM24) Aluminium Alloy

Temperature Rating
-65° to 150° C (-85° to 302° F)

Power Rating
Not Applicable

Terminal Populations (Maximum Number of Rails = 0)

Calculations do not include the use of end stops, end plates and separators. Check that the enclosure can accommodate the cable bending radius and that the earth stud and entry location will permit the required number of terminals to be fitted

Weidmuller	
BK4 (4 way)	0
BK6 (6 way)	0
BK12 (12 way)	0
MK 6/3	0
MK 6/4	0
MK 6/6	0
SAK 2.5	0
SAK 4	0
SAK 6N	0
SAK 10	0
SAK 16	0
SAK 35	0

Entrelec	
MA2.5/5	0
M4/6	0
M6/8	0
M10/10	0
M16/12	0
M35/16	0

Wago	
280-992	0
280-999	0
281-691	0
281-992	0
281-993	0
282-691	0
284-691	0
283-691	0
285-691	0
280-998	0
281-998	0
264-120	0
264-220	3
264-132(2)	0
264-134(4)	0
262-132(2)	0
264-134(4)	0

Drilling Envelope Dimensions (mm)

	Side A - C	Side B - D
Width	24	16
Height	21	21

Gland Entry Matrix *

Size	Side A - C	Side B - D
M12	1	0
M16	0	0
M20	0	0
M25	0	0
M32	0	0
M40	0	0

* Using standard gland clearances

Specifications

Part Number	Material	Width (mm)	Length (mm)	Depth (mm)	Weight (g)
ZAG1	Painted Aluminium (RAL7001)	50	45	30	75
ZAG1R	Unpainted Aluminium	50	45	30	75

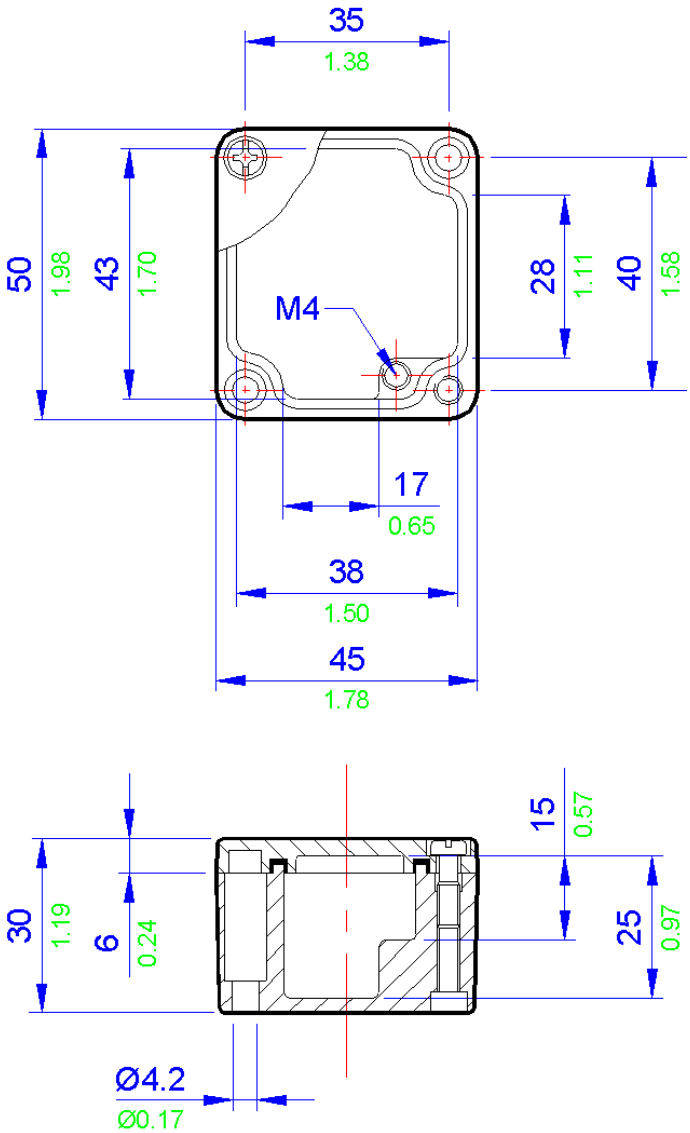

All **blue** dimensions in mm, all **green** dimensions in decimal inches (drawing not to scale)

ZAG2 / ZAG2R

Die Cast Aluminium Enclosures

IP65

Application
Hazardous and Industrial areas

Protection Degree
IP65

Certification
ATEX and IECEx:
- Ex ia (Zone 0) and Ex ta (Zone 20)
- Ex e Ex ib (Zone 1) and Ex tb (Zone 21)
- Ex nA (Zone 2) and Ex tc (Zone 22)

CSA Ex e (Class 1, Zone 1)

FM AEx e (Class 1, Zone 1)

TYPE 4X (CSA, FM, UL)

TR CU

Material
Precision Cast AlSI12 (LM24) Aluminium Alloy

Temperature Rating
-65° to 150° C (-85° to 302° F)*
*Refer to certificate for further details

Power Rating
0.900W

Terminal Populations (Maximum Number of Rails = 0)

Calculations do not include the use of end stops, end plates and separators. Check that the enclosure can accommodate the cable bending radius and that the earth stud and entry location will permit the required number of terminals to be fitted

Weidmuller	
BK4 (4 way)	1
BK6 (6 way)	0
BK12 (12 way)	0
MK 6/3	1
MK 6/4	0
MK 6/6	0
SAK 2.5	0
SAK 4	0
SAK 6N	0
SAK 10	0
SAK 16	0
SAK 35	0

Entrelec	
MA2.5/5	0
M4/6	0
M6/8	0
M10/10	0
M16/12	0
M35/16	0

Wago	
280-992	0
280-999	0
281-691	0
281-992	0
281-993	0
282-691	0
284-691	0
283-691	0
285-691	0
280-998	0
281-998	0
264-120	0
264-220	0
264-132(2)	0
264-134(4)	0
262-132(2)	0
264-134(4)	0

Drilling Envelope Dimensions (mm)

	Side A - C	Side B - D
Width	21	29
Height	20	20

Gland Entry Matrix *

Size	Side A - C	Side B - D
M12	1	1
M16	0	0
M20	0	0
M25	0	0
M32	0	0
M40	0	0

* Using standard gland clearances

Specifications

Part Number	Material	Width (mm)	Length (mm)	Depth (mm)	Weight (g)
ZAG2	Painted Aluminium (RAL7001)	58	64	34	170
ZAG2R	Unpainted Aluminium	58	64	34	170

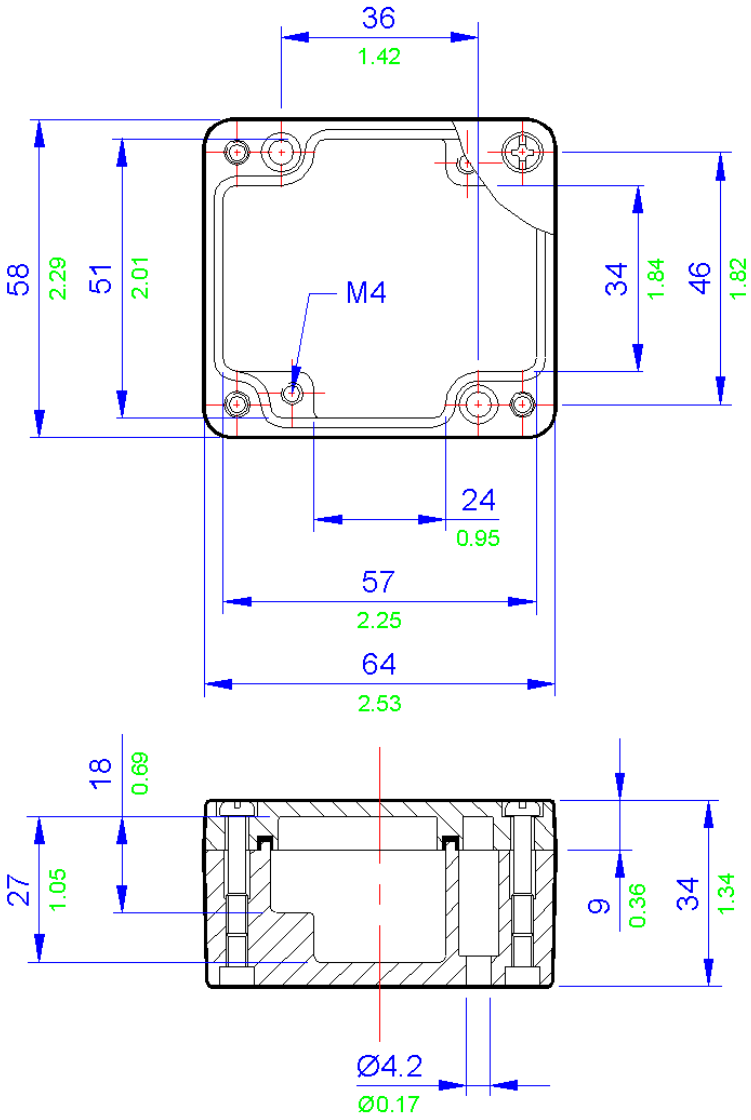

All **blue** dimensions in mm, all **green** dimensions in decimal inches (drawing not to scale)

ZAG3 / ZAG3R

Die Cast Aluminium Enclosures

IP65

Application
Hazardous and Industrial areas

Protection Degree
IP65

Certification
ATEX and IECEx:
- Ex ia (Zone 0) and Ex ta (Zone 20)
- Ex e Ex ib (Zone 1) and Ex tb (Zone 21)
- Ex nA (Zone 2) and Ex tc (Zone 22)

CSA Ex e (Class 1, Zone 1)

FM AEx e (Class 1, Zone 1)

TYPE 4X (CSA, FM, UL)

TR CU

Material
Precision Cast AlSI12 (LM24) Aluminium Alloy

Temperature Rating
-65° to 150° C (-85° to 302° F)*
*Refer to certificate for further details

Power Rating
1.200W

Terminal Populations (Maximum Number of Rails = 0)

Calculations do not include the use of end stops, end plates and separators. Check that the enclosure can accommodate the cable bending radius and that the earth stud and entry location will permit the required number of terminals to be fitted

Weidmuller	
BK4 (4 way)	1
BK6 (6 way)	1
BK12 (12 way)	0
MK 6/3	1
MK 6/4	1
MK 6/6	1
SAK 2.5	0
SAK 4	0
SAK 6N	0
SAK 10	0
SAK 16	0
SAK 35	0

Entrelec	
MA2.5/5	0
M4/6	0
M6/8	0
M10/10	0
M16/12	0
M35/16	0

Wago	
280-992	0
280-999	0
281-691	0
281-992	0
281-993	0
282-691	0
284-691	0
283-691	0
285-691	0
280-998	0
281-998	0
264-120	0
264-220	0
264-132(2)	0
264-134(4)	0
262-132(2)	0
264-134(4)	0

Drilling Envelope Dimensions (mm)

	Side A - C	Side B - D
Width	68	19
Height	21	21

Gland Entry Matrix *

Size	Side A - C	Side B - D
M12	3	1
M16	0	0
M20	0	0
M25	0	0
M32	0	0
M40	0	0

* Using standard gland clearances

Specifications

Part Number	Material	Width (mm)	Length (mm)	Depth (mm)	Weight (g)
ZAG3	Painted Aluminium (RAL7001)	98	64	34	220
ZAG3R	Unpainted Aluminium	98	64	34	220

Technical Drawing

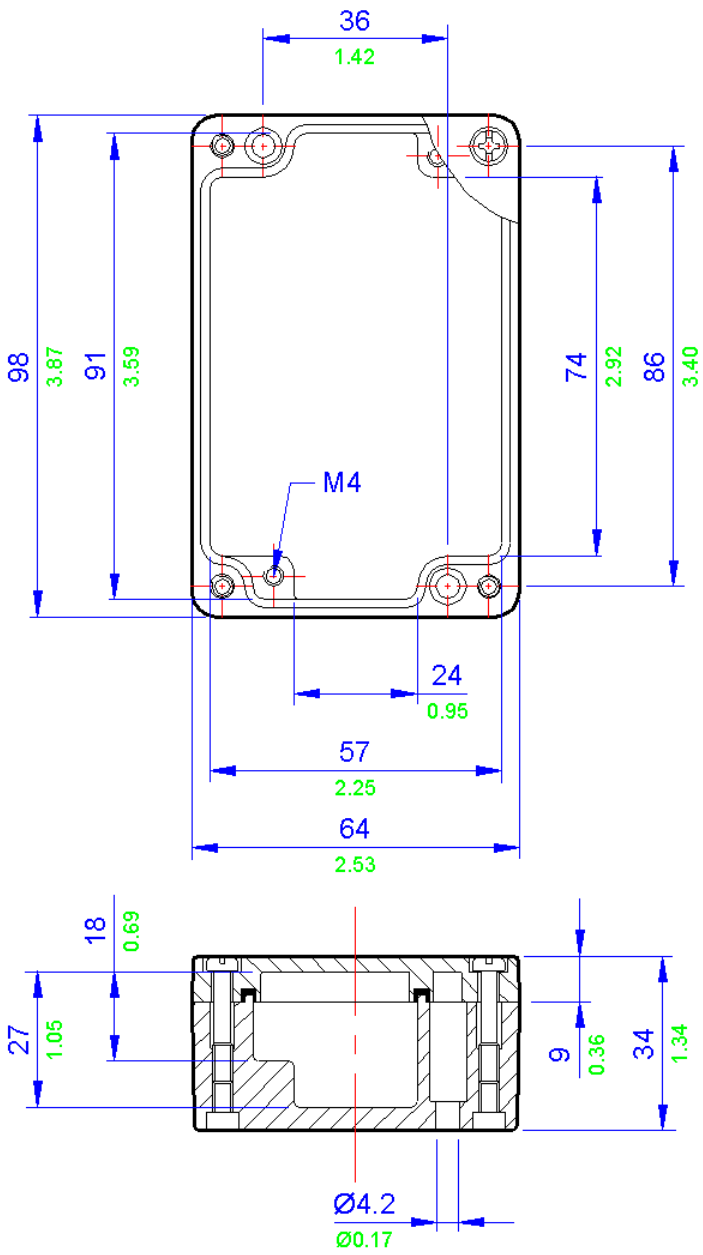

All **blue** dimensions in mm, all **green** dimensions in decimal inches (drawing not to scale)

ZAG4 / ZAG4R

Die Cast Aluminium Enclosures

IP67

Application
Industrial and Hazardous areas

Protection Degree
IP67

Certification
ATEX and IECEx:
- Ex ia (Zone 0) and Ex ta (Zone 20)
- Ex e Ex ib (Zone 1) and Ex tb (Zone 21)
- Ex nA (Zone 2) and Ex tc (Zone 22)

CSA Ex e (Class 1, Zone 1)

FM AEx e (Class 1, Zone 1)

TYPE 4X (CSA, FM, UL)

TR CU

Material
Precision Cast AlSI12 (LM24) Aluminium Alloy

Temperature Rating
-65° to 150° C (-85° to 302° F)*
*Refer to certificate for further details

Power Rating
1.700W

Terminal Populations (Maximum Number of Rails = 0)

Calculations do not include the use of end stops, end plates and separators. Check that the enclosure can accommodate the cable bending radius and that the earth stud and entry location will permit the required number of terminals to be fitted

Weidmuller	
BK4 (4 way)	3
BK6 (6 way)	2
BK12 (12 way)	1
MK 6/3	3
MK 6/4	2
MK 6/6	1
SAK 2.5	0
SAK 4	0
SAK 6N	0
SAK 10	0
SAK 16	0
SAK 35	0

Entrelec	
MA2.5/5	0
M4/6	0
M6/8	0
M10/10	0
M16/12	0
M35/16	0

Wago	
280-992	0
280-999	0
281-691	0
281-992	0
281-993	0
282-691	0
284-691	0
283-691	0
285-691	0
280-998	0
281-998	0
264-120	0
264-220	0
264-132(2)	0
264-134(4)	0
262-132(2)	0
264-134(4)	0

Drilling Envelope Dimensions (mm)

	Side A - C	Side B - D
Width	120	20
Height	22	22

Gland Entry Matrix *

Size	Side A - C	Side B - D
M12	4	1
M16	0	0
M20	0	0
M25	0	0
M32	0	0
M40	0	0

Specifications

Part Number	Material	Width (mm)	Length (mm)	Depth (mm)	Weight (g)
ZAG4	Painted Aluminium (RAL7001)	150	64	34	330
ZAG4R	Unpainted Aluminium	150	64	34	330

Technical Drawing

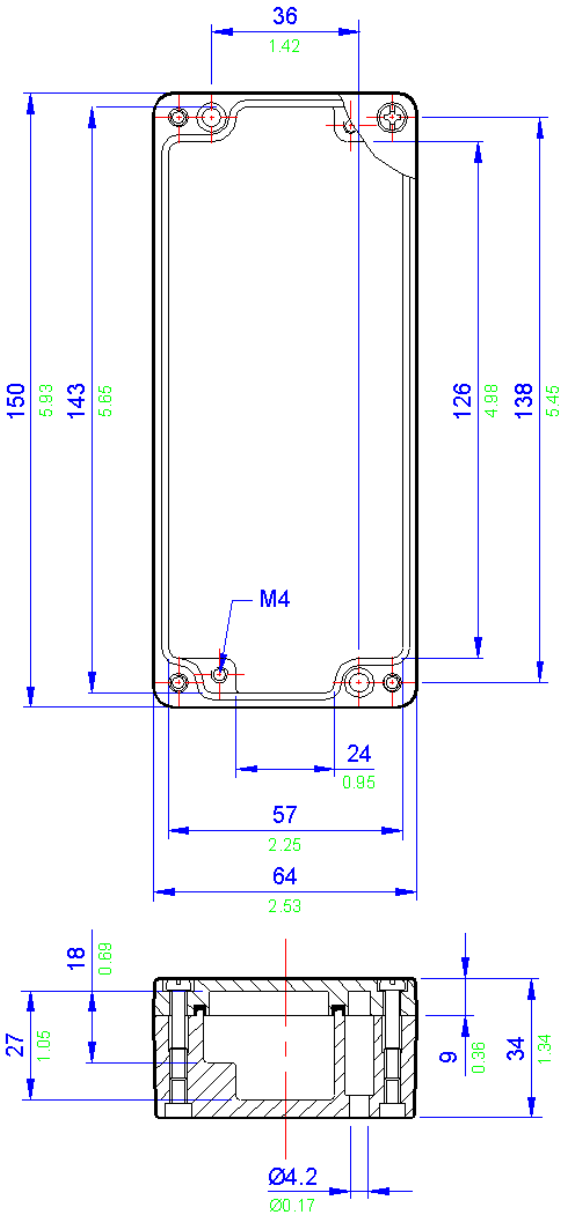

All **blue** dimensions in mm, all **green** dimensions in decimal inches (drawing not to scale)

ZAG5 / ZAG5R

Die Cast Aluminium Enclosures

IP67

Application
Industrial and Hazardous areas

Protection Degree
IP67

Certification
ATEX and IECEx:
- Ex ia (Zone 0) and Ex ta (Zone 20)
- Ex e Ex ib (Zone 1) and Ex tb (Zone 21)
- Ex nA (Zone 2) and Ex tc (Zone 22)

CSA Ex e (Class 1, Zone 1)

FM AEx e (Class 1, Zone 1)

TYPE 4X (CSA, FM, UL)

TR CU

Material
Precision Cast AlSI12 (LM24) Aluminium Alloy

Temperature Rating
-65° to 150°C (-85° to 302° F)*
*Refer to certificate for further details

Power Rating
1.500W

Terminal Populations (Maximum Number of Rails = 1)

Calculations do not include the use of end stops, end plates and separators. Check that the enclosure can accommodate the cable bending radius and that the earth stud and entry location will permit the required number of terminals to be fitted

Weidmuller	
BK4 (4 way)	1
BK6 (6 way)	0
BK12 (12 way)	0
MK 6/3	1
MK 6/4	1
MK 6/6	0
SAK 2.5	0
SAK 4	0
SAK 6N	0
SAK 10	0
SAK 16	0
SAK 35	0

Entrelec	
MA2.5/5	0
M4/6	0
M6/8	0
M10/10	0
M16/12	0
M35/16	0

Wago	
280-992	0
280-999	0
281-691	0
281-992	0
281-993	0
282-691	0
284-691	0
283-691	0
285-691	0
280-998	0
281-998	0
264-120	6
264-220	3
264-132(2)	1
264-134(4)	0
262-132(2)	1
264-134(4)	0

Drilling Envelope Dimensions (mm)

	Side A - C	Side B - D
Width	41	39
Height	37	31

Gland Entry Matrix *

Size	Side A - C	Side B - D
M16	1	0
M20	0	0
M25	0	0
M32	0	0
M40	0	0

* Using standard gland clearances

Specifications

Part Number	Material	Width (mm)	Length (mm)	Depth (mm)	Weight (g)
ZAG5	Painted Aluminium (RAL7001)	75	80	57	290
ZAG5R	Unpainted Aluminium	75	80	57	290

Technical Drawing

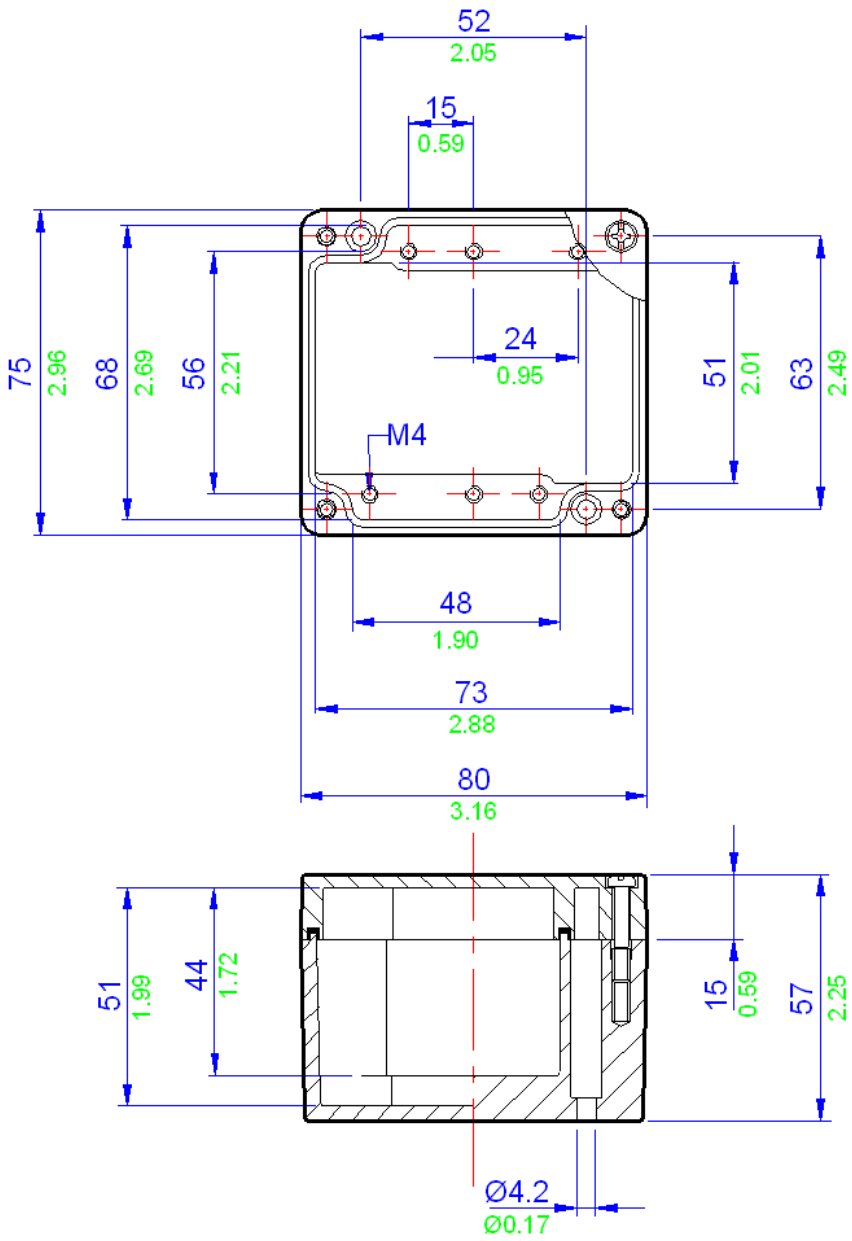

All **blue** dimensions in mm, all **green** dimensions in decimal inches (drawing not to scale)

ZAG6 / ZAG6R

Die Cast Aluminium Enclosures

IP67

Application
Industrial and Hazardous areas

Protection Degree
IP67

Certification
ATEX and IECEx:
- Ex ia (Zone 0) and Ex ta (Zone 20)
- Ex e Ex ib (Zone 1) and Ex tb (Zone 21)
- Ex nA (Zone 2) and Ex tc (Zone 22)

CSA Ex e (Class 1, Zone 1)

FM AEx e (Class 1, Zone 1)

TYPE 4X (CSA, FM, UL)

TR CU

Material
Precision Cast AISI12 (LM24) Aluminium Alloy

Temperature Rating
-65° to 150° C (-85° to 302° F)*
*Refer to certificate for further details

Power Rating
2.200W

Terminal Populations (Maximum Number of Rails = 1)

Calculations do not include the use of end stops, end plates and separators. Check that the enclosure can accommodate the cable bending radius and that the earth stud and entry location will permit the required number of terminals to be fitted

Weidmuller	
BK4 (4 way)	2
BK6 (6 way)	1
BK12 (12 way)	1
MK 6/3	2
MK 6/4	1
MK 6/6	1
SAK 2.5	0
SAK 4	0
SAK 6N	0
SAK 10	0
SAK 16	0
SAK 35	0

Entrelec	
MA2.5/5	0
M4/6	0
M6/8	0
M10/10	0
M16/12	0
M35/16	0

Wago	
280-992	0
280-999	0
281-691	0
281-992	0
281-993	0
282-691	0
284-691	0
283-691	0
285-691	0
280-998	0
281-998	0
264-120	14
264-220	8
264-132(2)	3
264-134(4)	2
262-132(2)	3
264-134(4)	2

Drilling Envelope Dimensions (mm)

	Side A - C	Side B - D
Width	95	42
Height	38	31

Gland Entry Matrix *

Size	Side A - C	Side B - D
M16	2	0
M20	0	0
M25	0	0
M32	0	0
M40	0	0

* Using standard gland clearances

Specifications

Part Number	Material	Width (mm)	Length (mm)	Depth (mm)	Weight (g)
ZAG6	Painted Aluminium (RAL7001)	125	80	57	435
ZAG6R	Unpainted Aluminium	125	80	57	435

Technical Drawing

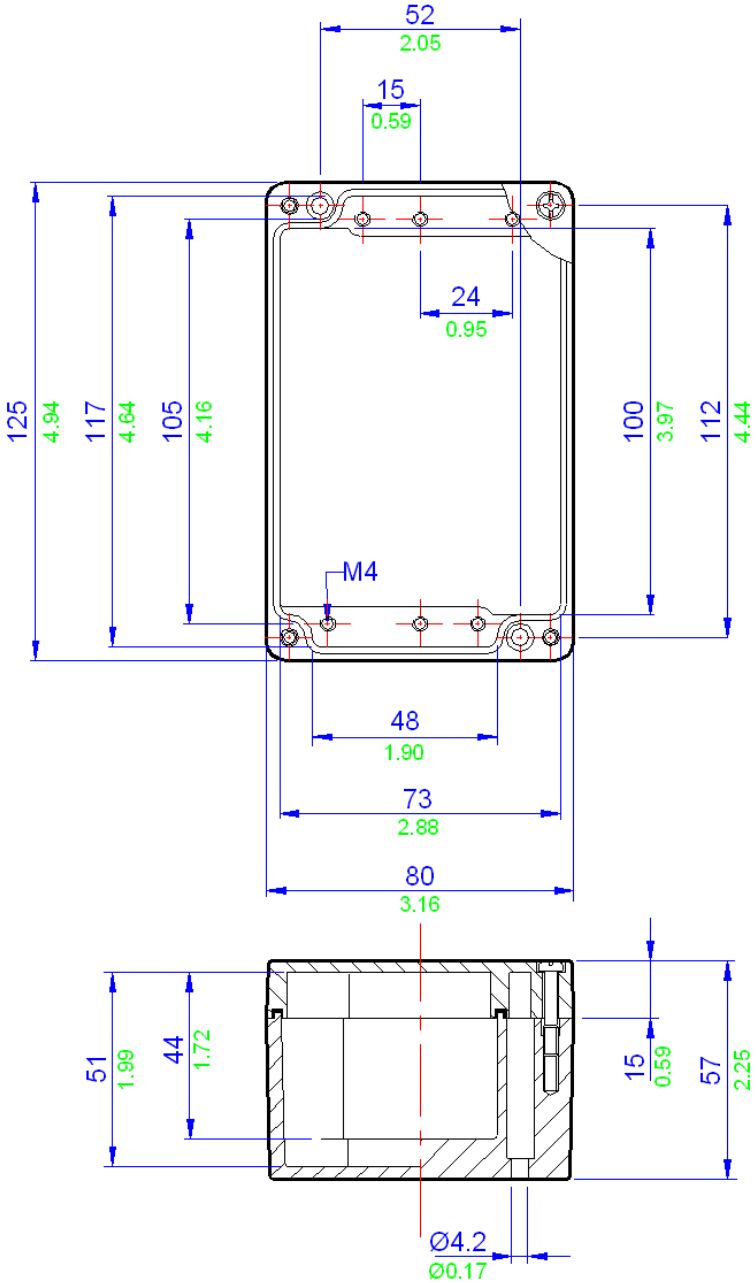

All **blue** dimensions in mm, all **green** dimensions in decimal inches (drawing not to scale)

ZAG7 / ZAG7R

Die Cast Aluminium Enclosures

IP67

Application
Industrial and Hazardous areas

Protection Degree
IP67

Certification
ATEX and IECEx:
- Ex ia (Zone 0) and Ex ta (Zone 20)
- Ex e Ex ib (Zone 1) and Ex tb (Zone 21)
- Ex nA (Zone 2) and Ex tc (Zone 22)

CSA Ex e (Class 1, Zone 1)

FM AEx e (Class 1, Zone 1)

TYPE 4X (CSA, FM, UL)

TR CU

Material
Precision Cast AlSI12 (LM24) Aluminium Alloy

Temperature Rating
-65° to 150° C (-85° to 302° F)*
*Refer to certificate for further details

Power Rating
2.900W

Terminal Populations (Maximum Number of Rails = 1)

Calculations do not include the use of end stops, end plates and separators. Check that the enclosure can accommodate the cable bending radius and that the earth stud and entry location will permit the required number of terminals to be fitted

Weidmuller	
BK4 (4 way)	4
BK6 (6 way)	3
BK12 (12 way)	1
MK 6/3	3
MK 6/4	2
MK 6/6	1
SAK 2.5	0
SAK 4	0
SAK 6N	0
SAK 10	0
SAK 16	0
SAK 35	0

Entrelec	
MA2.5/5	0
M4/6	0
M6/8	0
M10/10	0
M16/12	0
M35/16	0

Wago	
280-992	0
280-999	0
281-691	0
281-992	0
281-993	0
282-691	0
284-691	0
283-691	0
285-691	0
280-998	0
281-998	0
264-120	23
264-220	13
264-132(2)	4
264-134(4)	3
262-132(2)	4
264-134(4)	3

Drilling Envelope Dimensions (mm)

	Side A - C	Side B - D
Width	141	39
Height	37	31

Gland Entry Matrix *

Size	Side A - C	Side B - D
M16	4	0
M20	0	0
M25	0	0
M32	0	0
M40	0	0

* Using standard gland clearances

Specifications

Part Number	Material	Width (mm)	Length (mm)	Depth (mm)	Weight (g)
ZAG7	Painted Aluminium (RAL7001)	175	80	57	540
ZAG7R	Unpainted Aluminium	175	80	57	540

Technical Drawing

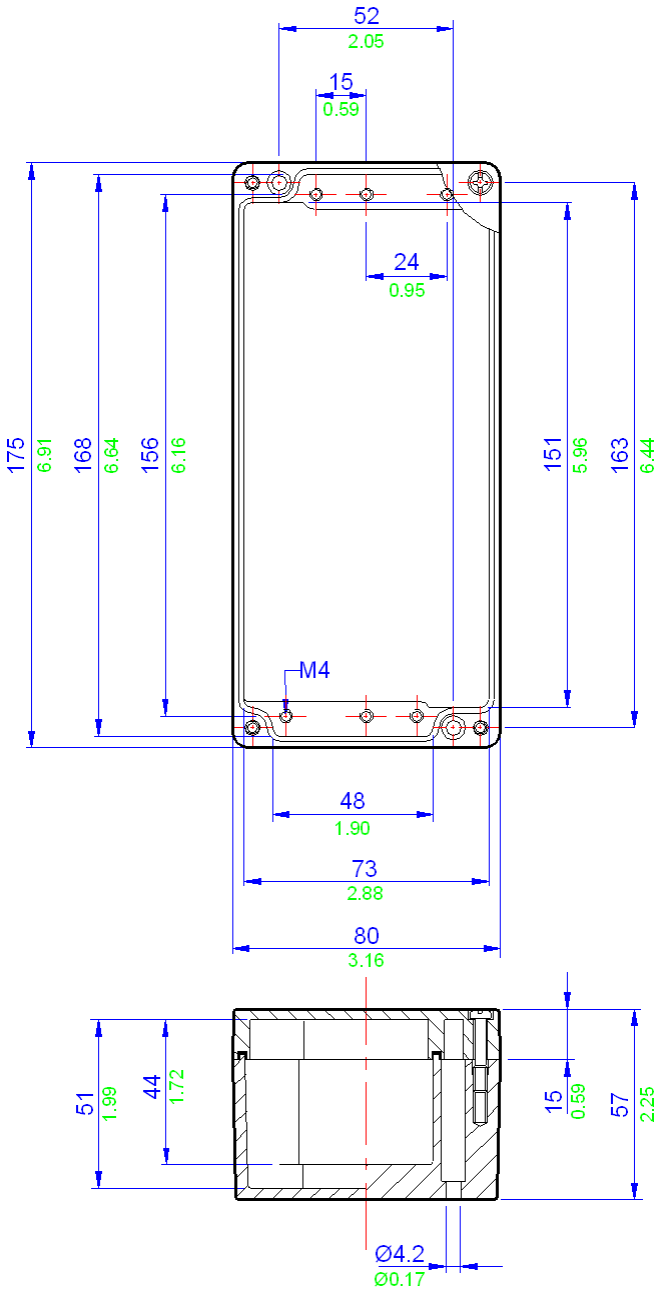

All **blue** dimensions in mm, all **green** dimensions in decimal inches (drawing not to scale)

ZAG8 / ZAG8R

Die Cast Aluminium Enclosures

IP65

Application
Industrial and Hazardous areas

Protection Degree
IP65

Certification
ATEX and IECEx:
- Ex ia (Zone 0) and Ex ta (Zone 20)
- Ex e Ex ib (Zone 1) and Ex tb (Zone 21)
- Ex nA (Zone 2) and Ex tc (Zone 22)

CSA Ex e (Class 1, Zone 1)

FM AEx e (Class 1, Zone 1)

TYPE 4X (CSA, FM, UL)

TR CU

Material
Precision Cast AlSI12 (LM24) Aluminium Alloy

Temperature Rating
-65° to 150°C (-85° to 302° F)*
*Refer to certificate for further details

Power Rating
2.900W

Terminal Populations (Maximum Number of Rails = 1)

Calculations do not include the use of end stops, end plates and separators. Check that the enclosure can accommodate the cable bending radius and that the earth stud and entry location will permit the required number of terminals to be fitted

Weidmuller	
BK4 (4 way)	6
BK6 (6 way)	4
BK12 (12 way)	2
MK 6/3	4
MK 6/4	4
MK 6/6	3
SAK 2.5	0
SAK 4	0
SAK 6N	0
SAK 10	0
SAK 16	0
SAK 35	0

Entrelec	
MA2.5/5	0
M4/6	0
M6/8	0
M10/10	0
M16/12	0
M35/16	0

Wago	
280-992	0
280-999	0
281-691	0
281-992	0
281-993	0
282-691	0
284-691	0
283-691	0
285-691	0
280-998	0
281-998	0
264-120	35
264-220	21
264-132(2)	7
264-134(4)	5
262-132(2)	7
264-134(4)	5

Drilling Envelope Dimensions (mm)

	Side A - C	Side B - D
Width	222	31
Height	35	42

Gland Entry Matrix *

Size	Side A - C	Side B - D
M16	6	0
M20	0	0
M25	0	0
M32	0	0
M40	0	0

* Using standard gland clearances

Specifications

Part Number	Material	Width (mm)	Length (mm)	Depth (mm)	Weight (g)
ZAG8	Painted Aluminium (RAL7001)	250	80	56	710
ZAG8R	Unpainted Aluminium	250	80	56	710

Technical Drawing

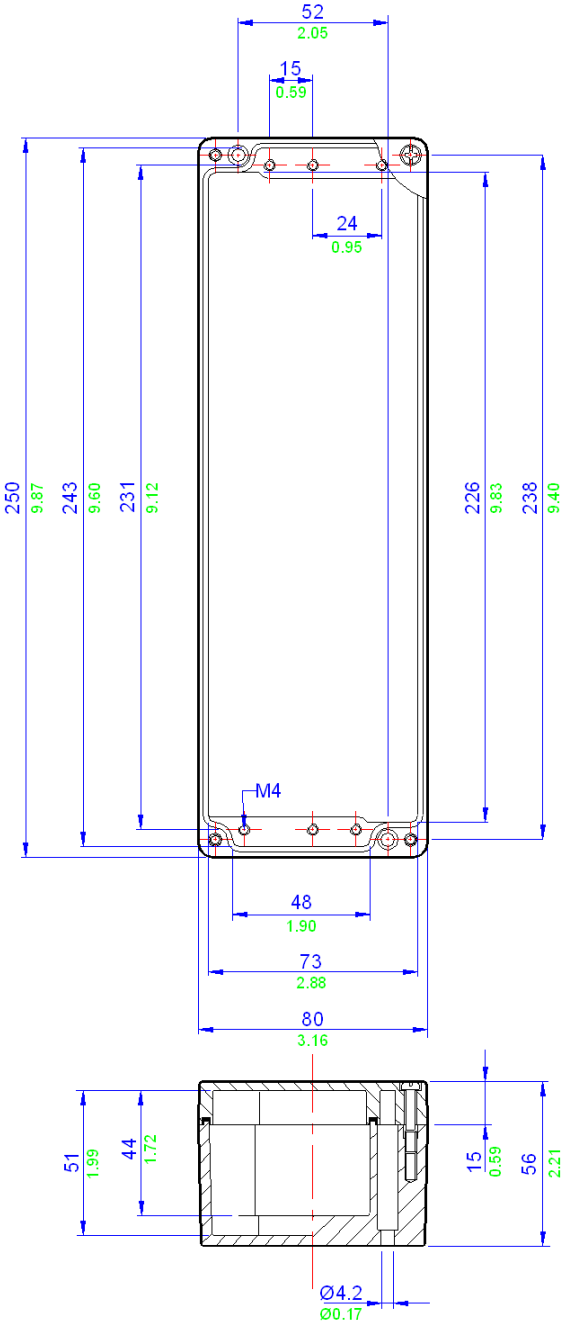

All **blue** dimensions in mm, all **green** dimensions in decimal inches (drawing not to scale)

ZAG9 / ZAG9R

Die Cast Aluminium Enclosures

IP67

Application
Industrial and Hazardous areas

Protection Degree
IP67

Certification
ATEX and IECEx:
- Ex ia (Zone 0) and Ex ta (Zone 20)
- Ex e Ex ib (Zone 1) and Ex tb (Zone 21)
- Ex nA (Zone 2) and Ex tc (Zone 22)

CSA Ex e (Class 1, Zone 1)

FM AEx e (Class 1, Zone 1)

TYPE 4X (CSA, FM, UL)

TR CU

Material
Precision Cast AlSI12 (LM24) Aluminium Alloy

Temperature Rating
-65° to 150° C (-85° to 302° F)*
*Refer to certificate for further details

Power Rating
3.400W

Terminal Populations (Maximum Number of Rails = 1)

Calculations do not include the use of end stops, end plates and separators. Check that the enclosure can accommodate the cable bending radius and that the earth stud and entry location will permit the required number of terminals to be fitted

Weidmuller	
BK4 (4 way)	2
BK6 (6 way)	2
BK12 (12 way)	1
MK 6/3	1
MK 6/4	1
MK 6/6	1
SAK 2.5	14
SAK 4	13
SAK 6N	10
SAK 10	8
SAK 16	7
SAK 35	5

Entrelec	
MA2.5/5	17
M4/6	14
M6/8	8
M10/10	8
M16/12	7
M35/16	5

Wago	
280-992	15
280-999	15
281-691	13
281-992	13
281-993	13
282-691	10
284-691	8
283-691	6
285-691	0
280-998	15
281-998	13
264-120	13
264-220	8
264-132(2)	3
264-134(4)	2
262-132(2)	3
264-134(4)	2

Drilling Envelope Dimensions (mm)

	Side A - C	Side B - D
Width	82	56
Height	55	45

Gland Entry Matrix *

Size	Side A - C	Side B - D
M16	2	1
M20	2	1
M25	1	0
M32	0	0
M40	0	0

* Using standard gland clearances

Specifications

Part Number	Material	Width (mm)	Length (mm)	Depth (mm)	Weight (g)
ZAG9	Painted Aluminium (RAL7001)	122	120	80	940
ZAG9R	Unpainted Aluminium	122	120	80	940

Technical Drawing

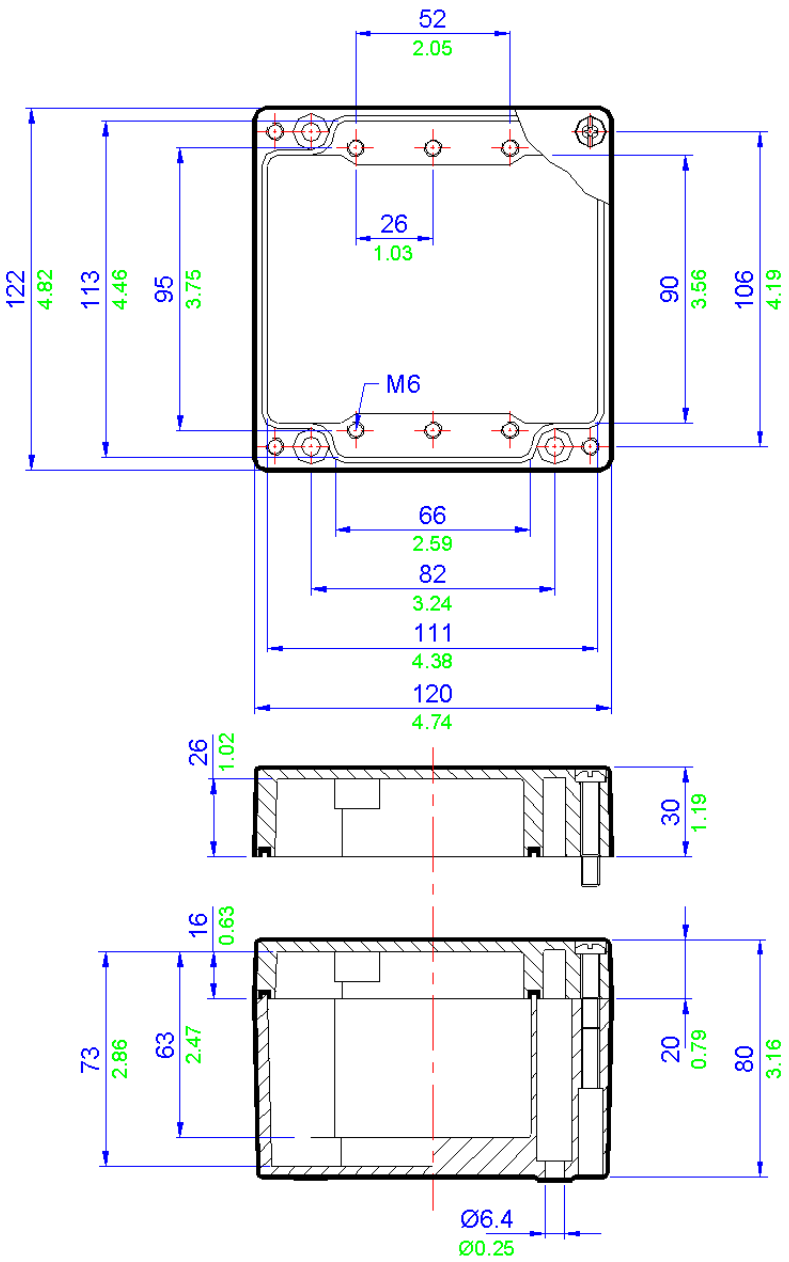

All **blue** dimensions in mm, all **green** dimensions in decimal inches (drawing not to scale)

ZAG9-9 / ZAG9-9R Die Cast Aluminium Enclosures IP67

Application
Industrial and Hazardous areas

Protection Degree
IP67

Certification
ATEX and IECEx:
- Ex ia (Zone 0) and Ex ta (Zone 20)
- Ex e Ex ib (Zone 1) and Ex tb (Zone 21)
- Ex nA (Zone 2) and Ex tc (Zone 22)

CSA Ex e (Class 1, Zone 1)

FM AEx e (Class 1, Zone 1)

TYPE 4X (CSA, FM, UL)

TR CU

Material
Precision Cast AlSI12 (LM24) Aluminium Alloy

Temperature Rating
-65° to 150°C (-85° to 302° F)*
*Refer to certificate for further details

Power Rating
3.400W

Terminal Populations (Maximum Number of Rails = 1)

Calculations do not include the use of end stops, end plates and separators. Check that the enclosure can accommodate the cable bending radius and that the earth stud and entry location will permit the required number of terminals to be fitted

Weidmuller	
BK4 (4 way)	2
BK6 (6 way)	2
BK12 (12 way)	1
MK 6/3	1
MK 6/4	1
MK 6/6	1
SAK 2.5	14
SAK 4	13
SAK 6N	10
SAK 10	8
SAK 16	7
SAK 35	5

Entrelec	
MA2.5/5	17
M4/6	14
M6/8	8
M10/10	8
M16/12	7
M35/16	5

Wago	
280-992	15
280-999	15
281-691	13
281-992	13
281-993	13
282-691	10
284-691	8
283-691	6
285-691	0
280-998	15
281-998	13
264-120	13
264-220	8
264-132(2)	3
264-134(4)	2
262-132(2)	3
264-134(4)	2

Drilling Envelope Dimensions (mm)

	Side A - C	Side B - D
Width	82	56
Height	55	45

Gland Entry Matrix *

Size	Side A - C	Side B - D
M16	2	1
M20	2	1
M25	1	0
M32	0	0
M40	0	0

* Using standard gland clearances

Specifications

Part Number	Material	Width (mm)	Length (mm)	Depth (mm)	Weight (g)
ZAG9-9	Painted Aluminium (RAL7001)	122	120	90	965
ZAG9-9R	Unpainted Aluminium	122	120	90	965

Technical Drawing

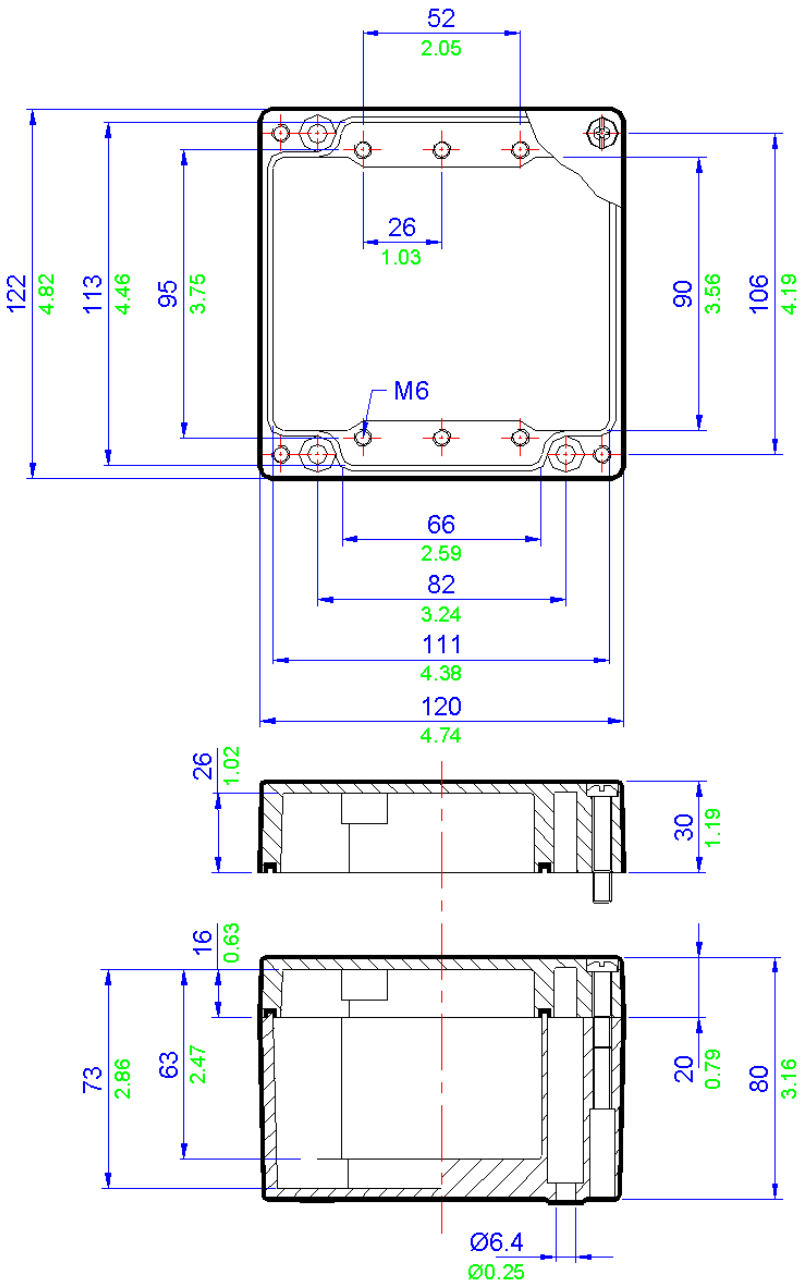

All **blue** dimensions in mm, all **green** dimensions in decimal inches (drawing not to scale)

ZAG10 / ZAG10R Die Cast Aluminium Enclosures IP67

Application
Industrial and Hazardous areas

Protection Degree
IP67

Certification
ATEX and IECEx:
- Ex ia (Zone 0) and Ex ta (Zone 20)
- Ex e Ex ib (Zone 1) and Ex tb (Zone 21)
- Ex nA (Zone 2) and Ex tc (Zone 22)

CSA Ex e (Class 1, Zone 1)

FM AEx e (Class 1, Zone 1)

TYPE 4X (CSA, FM, UL)

TR CU

Material
Precision Cast AlSI12 (LM24) Aluminium Alloy

Temperature Rating
-65° to 150° C (-85° to 302° F)*
*Refer to certificate for further details

Power Rating
5.400W

Terminal Populations (Maximum Number of Rails = 1)

Calculations do not include the use of end stops, end plates and separators. Check that the enclosure can accommodate the cable bending radius and that the earth stud and entry location will permit the required number of terminals to be fitted

Weidmuller	
BK4 (4 way)	5
BK6 (6 way)	3
BK12 (12 way)	2
MK 6/3	5
MK 6/4	4
MK 6/6	2
SAK 2.5	30
SAK 4	28
SAK 6N	22
SAK 10	18
SAK 16	15
SAK 35	11

Entrelec	
MA2.5/5	36
M4/6	30
M6/8	22
M10/10	18
M16/12	15
M35/16	11

Wago	
280-992	34
280-999	34
281-691	29
281-992	29
281-993	29
282-691	22
284-691	18
283-691	15
285-691	0
280-998	34
281-998	29
264-120	30
264-220	18
264-132(2)	6
264-134(4)	4
262-132(2)	6
264-134(4)	4

Drilling Envelope Dimensions (mm)

	Side A - C	Side B - D
Width	178	46
Height	55	56

Gland Entry Matrix *

Size	Side A - C	Side B - D
M16	6	1
M20	4	1
M25	3	1
M32	0	0
M40	0	0

* Using standard gland clearances

Specifications

Part Number	Material	Width (mm)	Length (mm)	Depth (mm)	Weight (g)
ZAG10	Painted Aluminium (RAL7001)	220	120	80	1410
ZAG10R	Unpainted Aluminium	220	120	80	1410

Technical Drawing

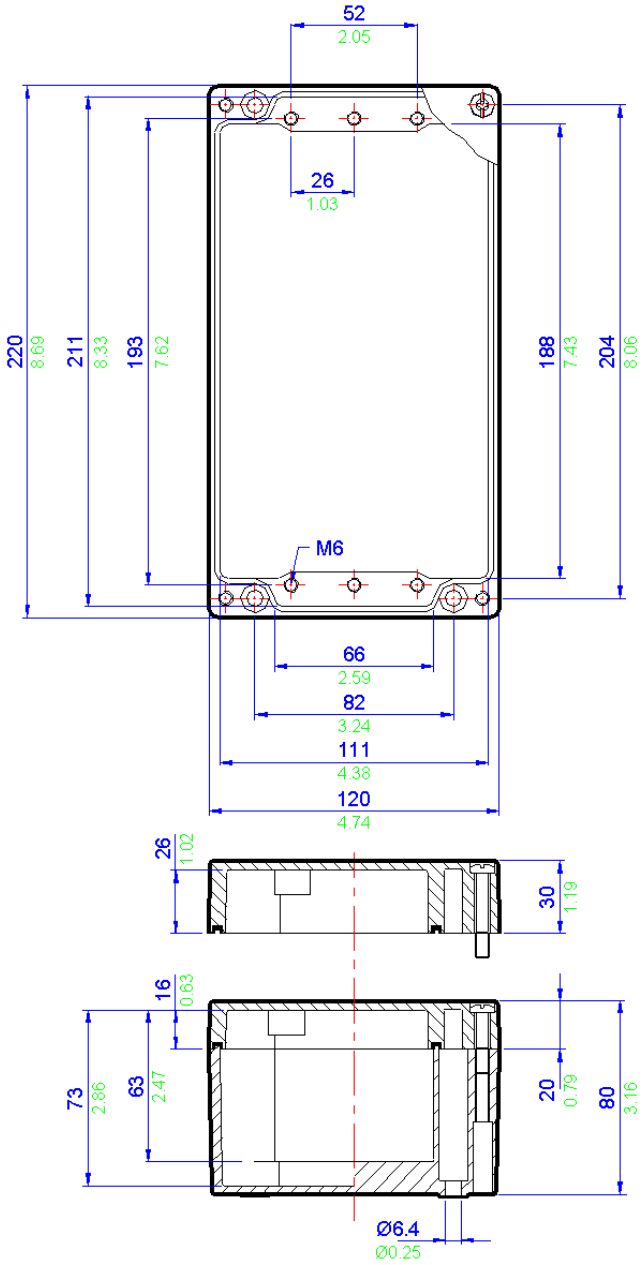

All **blue** dimensions in mm, all **green** dimensions in decimal inches (drawing not to scale)

ZAG10-9 / ZAG10-9R Die Cast Aluminium Enclosures IP67

Application
Industrial and Hazardous areas

Protection Degree
IP67

Certification
ATEX and IECEx:
- Ex ia (Zone 0) and Ex ta (Zone 20)
- Ex e Ex ib (Zone 1) and Ex tb (Zone 21)
- Ex nA (Zone 2) and Ex tc (Zone 22)

CSA Ex e (Class 1, Zone 1)

FM AEx e (Class 1, Zone 1)

TYPE 4X (CSA, FM, UL)

TR CU

Material
Precision Cast AISI12 (LM24) Aluminium Alloy

Temperature Rating
-65° to 150°C (-85° to 302° F)*
*Refer to certificate for further details

Power Rating
5.400W

Terminal Populations (Maximum Number of Rails = 1)

Calculations do not include the use of end stops, end plates and separators. Check that the enclosure can accommodate the cable bending radius and that the earth stud and entry location will permit the required number of terminals to be fitted

Weidmuller	
BK4 (4 way)	5
BK6 (6 way)	3
BK12 (12 way)	2
MK 6/3	5
MK 6/4	4
MK 6/6	2
SAK 2.5	30
SAK 4	28
SAK 6N	22
SAK 10	18
SAK 16	15
SAK 35	11

Entrelec	
MA2.5/5	36
M4/6	30
M6/8	22
M10/10	18
M16/12	15
M35/16	11

Wago	
280-992	34
280-999	34
281-691	29
281-992	29
281-993	29
282-691	22
284-691	18
283-691	15
285-691	0
280-998	34
281-998	29
264-120	30
264-220	18
264-132(2)	6
264-134(4)	4
262-132(2)	6
264-134(4)	4

Drilling Envelope Dimensions (mm)

	Side A - C	Side B - D
Width	178	46
Height	55	56

Gland Entry Matrix *

Size	Side A - C	Side B - D
M16	6	1
M20	4	1
M25	3	1
M32	0	0
M40	0	0

* Using standard gland clearances

Specifications

Part Number	Material	Width (mm)	Length (mm)	Depth (mm)	Weight (g)
ZAG10-9	Painted Aluminium (RAL7001)	220	120	90	1440
ZAG10-9R	Unpainted Aluminium	220	120	90	1440

Technical Drawing

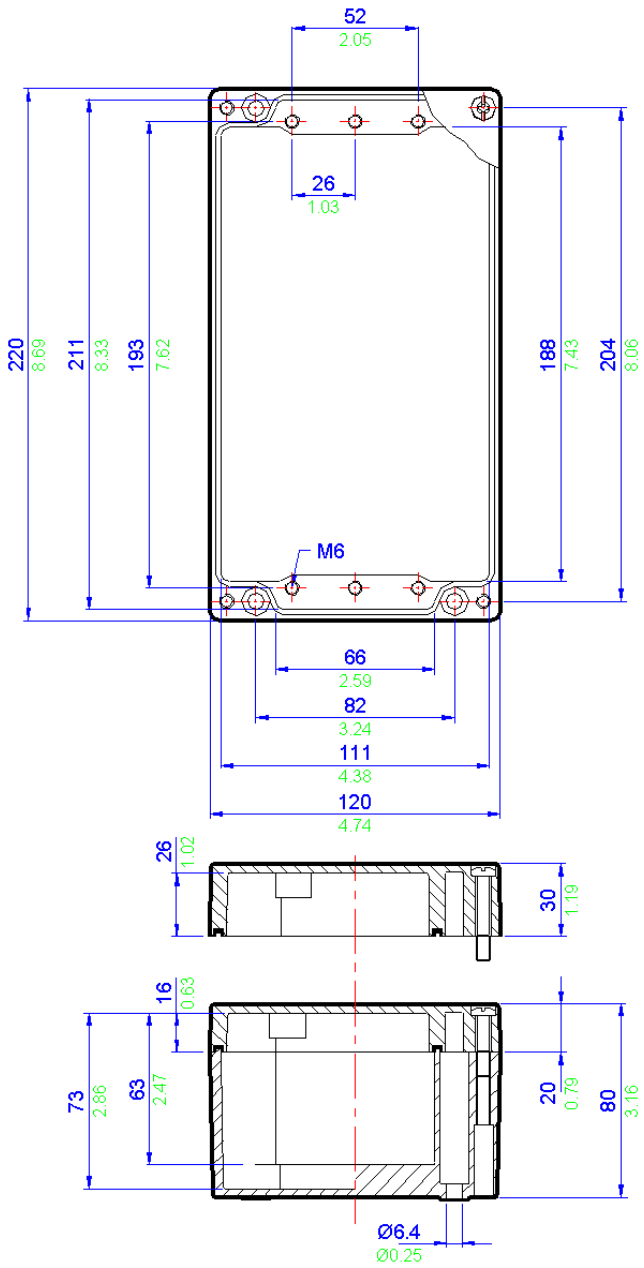

All **blue** dimensions in mm, all **green** dimensions in decimal inches (drawing not to scale)

ZAG11 / ZAG11R Die Cast Aluminium Enclosures IP67

Application
Industrial and Hazardous areas

Protection Degree
IP67

Certification
ATEX and IECEx:
- Ex ia (Zone 0) and Ex ta (Zone 20)
- Ex e Ex ib (Zone 1) and Ex tb (Zone 21)
- Ex nA (Zone 2) and Ex tc (Zone 22)

CSA Ex e (Class 1, Zone 1)

FM AEx e (Class 1, Zone 1)

TYPE 4X (CSA, FM, UL)

TR CU

Material
Precision Cast AISI12 (LM24) Aluminium Alloy

Temperature Rating
-65° to 150° C (-85° to 302° F)*
*Refer to certificate for further details

Power Rating
5.400W

Terminal Populations (Maximum Number of Rails = 1)

Calculations do not include the use of end stops, end plates and separators. Check that the enclosure can accommodate the cable bending radius and that the earth stud and entry location will permit the required number of terminals to be fitted

Weidmuller	
BK4 (4 way)	3
BK6 (6 way)	2
BK12 (12 way)	1
MK 6/3	3
MK 6/4	2
MK 6/6	1
SAK 2.5	20
SAK 4	19
SAK 6N	15
SAK 10	12
SAK 16	10
SAK 35	7

Entrelec	
MA2.5/5	24
M4/6	20
M6/8	15
M10/10	12
M16/12	10
M35/16	7

Wago	
280-992	22
280-999	22
281-691	19
281-992	19
281-993	19
282-691	15
284-691	12
283-691	10
285-691	0
280-998	22
281-998	19
264-120	20
264-220	12
264-132(2)	4
264-134(4)	3
262-132(2)	4
264-134(4)	2

Drilling Envelope Dimensions (mm)

	Side A - C	Side B - D
Width	110	80
Height	65	56

Gland Entry Matrix *

Size	Side A - C	Side B - D
M16	6	2
M20	2	2
M25	2	1
M32	1	0
M40	0	0

* Using standard gland clearances

Specifications

Part Number	Material	Width (mm)	Length (mm)	Depth (mm)	Weight (g)
ZAG11	Painted Aluminium (RAL7001)	160	160	90	1410
ZAG11R	Unpainted Aluminium	160	160	90	1410

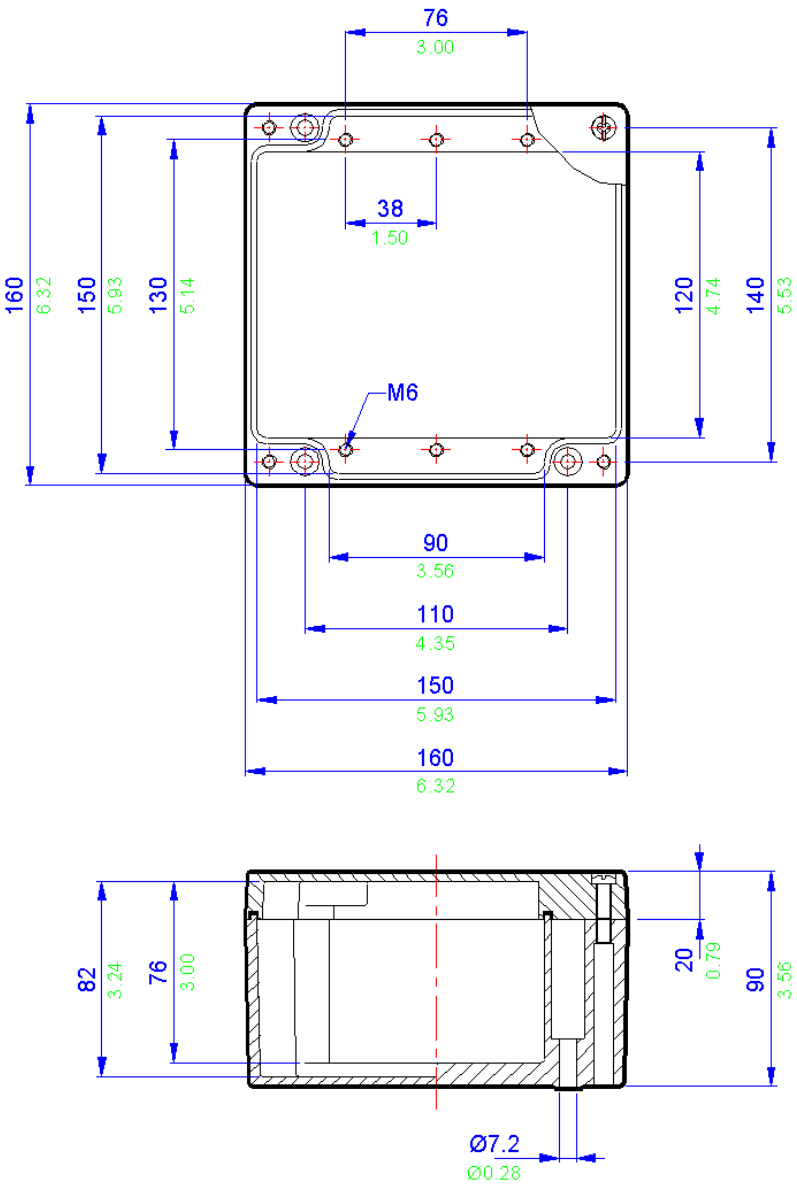

All **blue** dimensions in mm, all **green** dimensions in decimal inches (drawing not to scale)

ZAG12 / ZAG12R Die Cast Aluminium Enclosures IP67

Application
Industrial and Hazardous areas

Protection Degree
IP67

Certification
ATEX and IECEx:
- Ex ia (Zone 0) and Ex ta (Zone 20)
- Ex e Ex ib (Zone 1) and Ex tb (Zone 21)
- Ex nA (Zone 2) and Ex tc (Zone 22)

CSA Ex e (Class 1, Zone 1)

FM AEx e (Class 1, Zone 1)

TYPE 4X (CSA, FM, UL)

TR CU

Material
Precision Cast AISI12 (LM24) Aluminium Alloy

Temperature Rating
-65° to 150° C (-85° to 302° F)*
*Refer to certificate for further details

Power Rating
8.000W

Terminal Populations (Maximum Number of Rails = 1)

Calculations do not include the use of end stops, end plates and separators. Check that the enclosure can accommodate the cable bending radius and that the earth stud and entry location will permit the required number of terminals to be fitted

Weidmuller	
BK4 (4 way)	6
BK6 (6 way)	4
BK12 (12 way)	2
MK 6/3	5
MK 6/4	4
MK 6/6	3
SAK 2.5	36
SAK 4	34
SAK 6N	27
SAK 10	22
SAK 16	18
SAK 35	14

Entrelec	
MA2.5/5	43
M4/6	36
M6/8	27
M10/10	22
M16/12	18
M35/16	14

Wago	
280-992	40
280-999	40
281-691	34
281-992	34
281-993	34
282-691	27
284-691	21
283-691	18
285-691	0
280-998	40
281-998	34
264-120	36
264-220	21
264-132(2)	7
264-134(4)	5
262-132(2)	7
264-134(4)	5

Drilling Envelope Dimensions (mm)

	Side A - C	Side B - D
Width	210	80
Height	65	56

Gland Entry Matrix *

Size	Side A - C	Side B - D
M16	12	2
M20	6	2
M25	4	1
M32	3	0
M40	0	0

* Using standard gland clearances

Specifications

Part Number	Material	Width (mm)	Length (mm)	Depth (mm)	Weight (g)
ZAG12	Painted Aluminium (RAL7001)	260	160	90	1960
ZAG12R	Unpainted Aluminium	260	160	90	1960

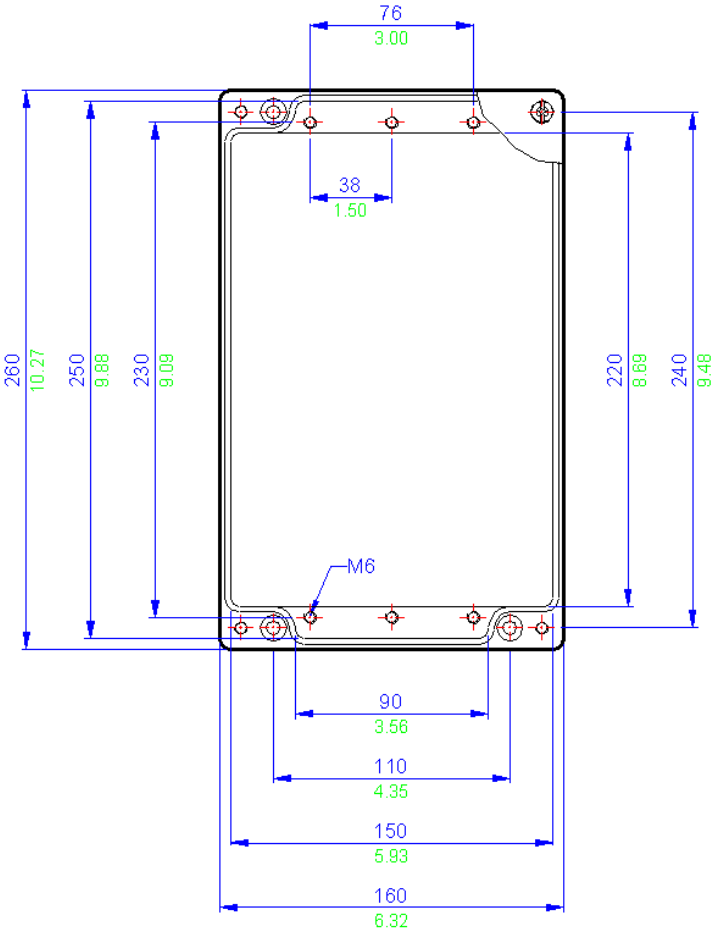

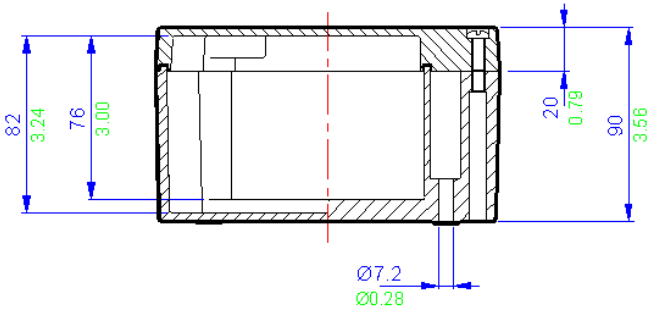

All **blue** dimensions in mm, all **green** dimensions in decimal inches (drawing not to scale)

ZAG13 / ZAG13R Die Cast Aluminium Enclosures IP65

Application
Industrial and Hazardous areas

Protection Degree
IP65

Certification
ATEX and IECEx:
- Ex ia (Zone 0) and Ex ta (Zone 20)
- Ex e Ex ib (Zone 1) and Ex tb (Zone 21)
- Ex nA (Zone 2) and Ex tc (Zone 22)

CSA Ex e (Class 1, Zone 1)

FM AEx e (Class 1, Zone 1)

TYPE 4X (CSA, FM, UL)

TR CU

Material
Precision Cast AISI12 (LM24) Aluminium Alloy

Temperature Rating
-65° to 150° C (-85° to 302° F)*
*Refer to certificate for further details

Power Rating
10.400W

Terminal Populations (Maximum Number of Rails = 2)

Calculations do not include the use of end stops, end plates and separators. Check that the enclosure can accommodate the cable bending radius and that the earth stud and entry location will permit the required number of terminals to be fitted

Weidmuller	
BK4 (4 way)	9
BK6 (6 way)	6
BK12 (12 way)	3
MK 6/3	7
MK 6/4	6
MK 6/6	4
SAK 2.5	52
SAK 4	48
SAK 6N	40
SAK 10	32
SAK 16	26
SAK 35	20

Entrelec	
MA2.5/5	63
M4/6	52
M6/8	40
M10/10	32
M16/12	26
M35/16	20

Wago	
280-992	58
280-999	58
281-691	50
281-992	50
281-993	50
282-691	39
284-691	31
283-691	26
285-691	0
280-998	58
281-998	50
264-120	52
264-220	31
264-132(2)	11
264-134(4)	7
262-132(2)	10
264-134(4)	7

Drilling Envelope Dimensions (mm)

	Side A - C	Side B - D
Width	314	80
Height	65	56

Gland Entry Matrix *

Size	Side A - C	Side B - D
M16	18	2
M20	8	2
M25	6	1
M32	5	0
M40	0	0

* Using standard gland clearances

Specifications

Part Number	Material	Width (mm)	Length (mm)	Depth (mm)	Weight (g)
ZAG13	Painted Aluminium (RAL7001)	360	160	90	2550
ZAG13R	Unpainted Aluminium	360	160	90	2550

Technical Drawing

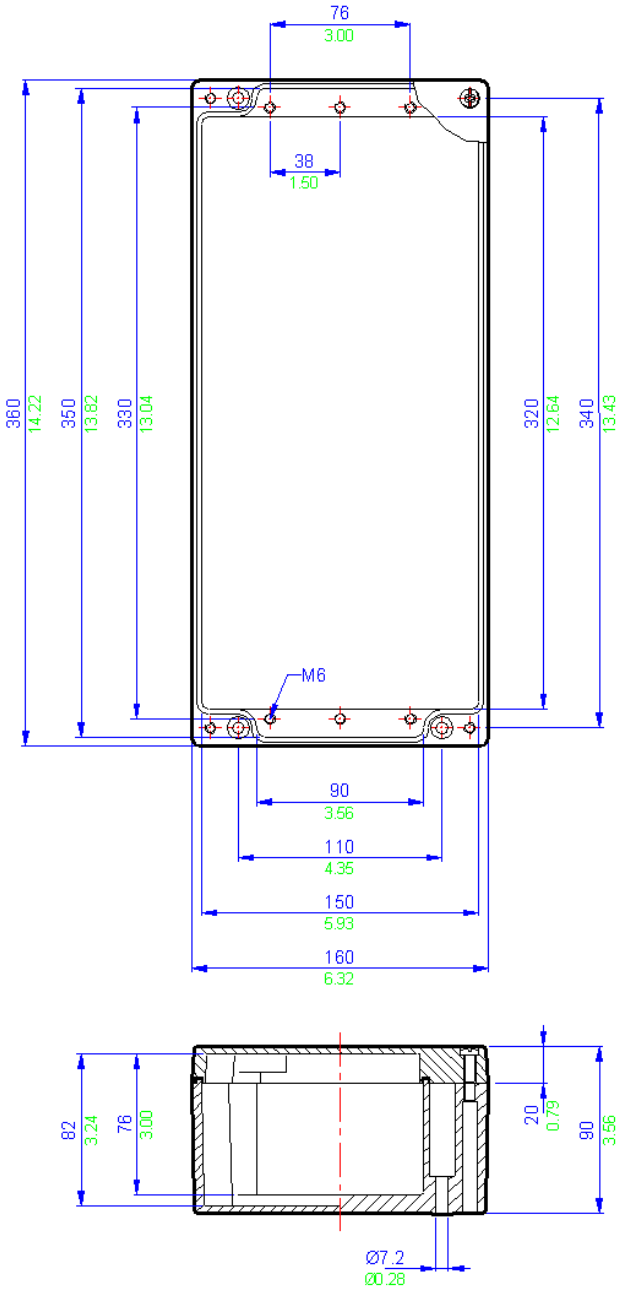

All **blue** dimensions in mm, all **green** dimensions in decimal inches (drawing not to scale)

ZAG14 / ZAG14R Die Cast Aluminium Enclosures IP65

Application
Industrial and Hazardous areas

Protection Degree
IP65

Certification
ATEX and IECEx:
- Ex ia (Zone 0) and Ex ta (Zone 20)
- Ex e Ex ib (Zone 1) and Ex tb (Zone 21)
- Ex nA (Zone 2) and Ex tc (Zone 22)

CSA Ex e (Class 1, Zone 1)

FM AEx e (Class 1, Zone 1)

TYPE 4X (CSA, FM, UL)

TR CU

Material
Precision Cast AlSI12 (LM24) Aluminium Alloy

Temperature Rating
-65° to 150° C (-85° to 302° F)*
*Refer to certificate for further details

Power Rating
10.400W

Terminal Populations (Maximum Number of Rails = 2)

Calculations do not include the use of end stops, end plates and separators. Check that the enclosure can accommodate the cable bending radius and that the earth stud and entry location will permit the required number of terminals to be fitted

Weidmuller	
BK4 (4 way)	14
BK6 (6 way)	10
BK12 (12 way)	5
MK 6/3	12
MK 6/4	11
MK 6/6	7
SAK 2.5	85
SAK 4	78
SAK 6N	64
SAK 10	51
SAK 16	43
SAK 35	32

Entrelec	
MA2.5/5	101
M4/6	85
M6/8	64
M10/10	51
M16/12	43
M35/16	32

Wago	
280-992	96
280-999	96
281-691	82
281-992	82
281-993	82
282-691	63
284-691	51
283-691	42
285-691	0
280-998	96
281-998	82
264-120	85
264-220	51
264-132(2)	18
264-134(4)	12
262-132(2)	18
264-134(4)	12

Drilling Envelope Dimensions (mm)

	Side A - C	Side B - D
Width	240	56
Height	65 (x2)	80

Gland Entry Matrix *

Size	Side A - C	Side B - D
M16	28	2
M20	12	2
M25	10	1
M32	8	0
M40	0	0

* Using standard gland clearances

Specifications

Part Number	Material	Width (mm)	Length (mm)	Depth (mm)	Weight (g)
ZAG14	Painted Aluminium (RAL7001)	560	160	90	4310
ZAG14R	Unpainted Aluminium	560	160	90	4310

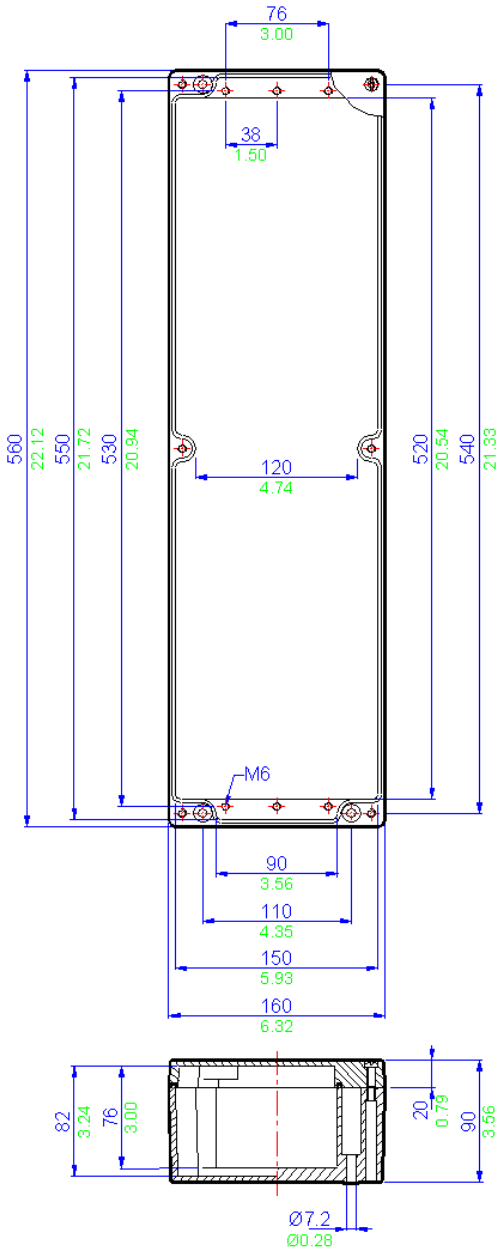

All **blue** dimensions in mm, all **green** dimensions in decimal inches (drawing not to scale)

ZAG15 / ZAG15R Die Cast Aluminium Enclosures IP65

Application
Industrial and Hazardous areas

Protection Degree
IP65

Certification
ATEX and IECEx:
- Ex ia (Zone 0) and Ex ta (Zone 20)
- Ex e Ex ib (Zone 1) and Ex tb (Zone 21)
- Ex nA (Zone 2) and Ex tc (Zone 22)

CSA Ex e (Class 1, Zone 1)

FM AEx e (Class 1, Zone 1)

TYPE 4X (CSA, FM, UL)

TR CU

Material
Precision Cast AlSI12 (LM24) Aluminium Alloy

Temperature Rating
-65° to 150° C (-85° to 302° F)*
*Refer to certificate for further details

Power Rating
9.500W

Terminal Populations (Maximum Number of Rails = 3)

Calculations do not include the use of end stops, end plates and separators. Check that the enclosure can accommodate the cable bending radius and that the earth stud and entry location will permit the required number of terminals to be fitted

Weidmuller	
BK4 (4 way)	10
BK6 (6 way)	8
BK12 (12 way)	4
MK 6/3	10
MK 6/4	8
MK 6/6	4
SAK 2.5	62
SAK 4	58
SAK 6N	48
SAK 10	38
SAK 16	32
SAK 35	24

Entrelec	
MA2.5/5	76
M4/6	62
M6/8	48
M10/10	38
M16/12	32
M35/16	24

Wago	
280-992	70
280-999	70
281-691	60
281-992	60
281-993	60
282-691	46
284-691	36
283-691	15
285-691	10
280-998	70
281-998	60
264-120	62
264-220	36
264-132(2)	12
264-134(4)	8
262-132(2)	12
264-134(4)	8

Drilling Envelope Dimensions (mm)

	Side A - C	Side B - D
Width	150	150
Height	85	76

Gland Entry Matrix *

Size	Side A - C	Side B - D
M16	9	8
M20	6	6
M25	4	3
M32	2	2
M40	2	2

* Using standard gland clearances

Specifications

Part Number	Material	Width (mm)	Length (mm)	Depth (mm)	Weight (g)
ZAG15	Painted Aluminium (RAL7001)	202	230	110	2750
ZAG15R	Unpainted Aluminium	202	230	110	2750

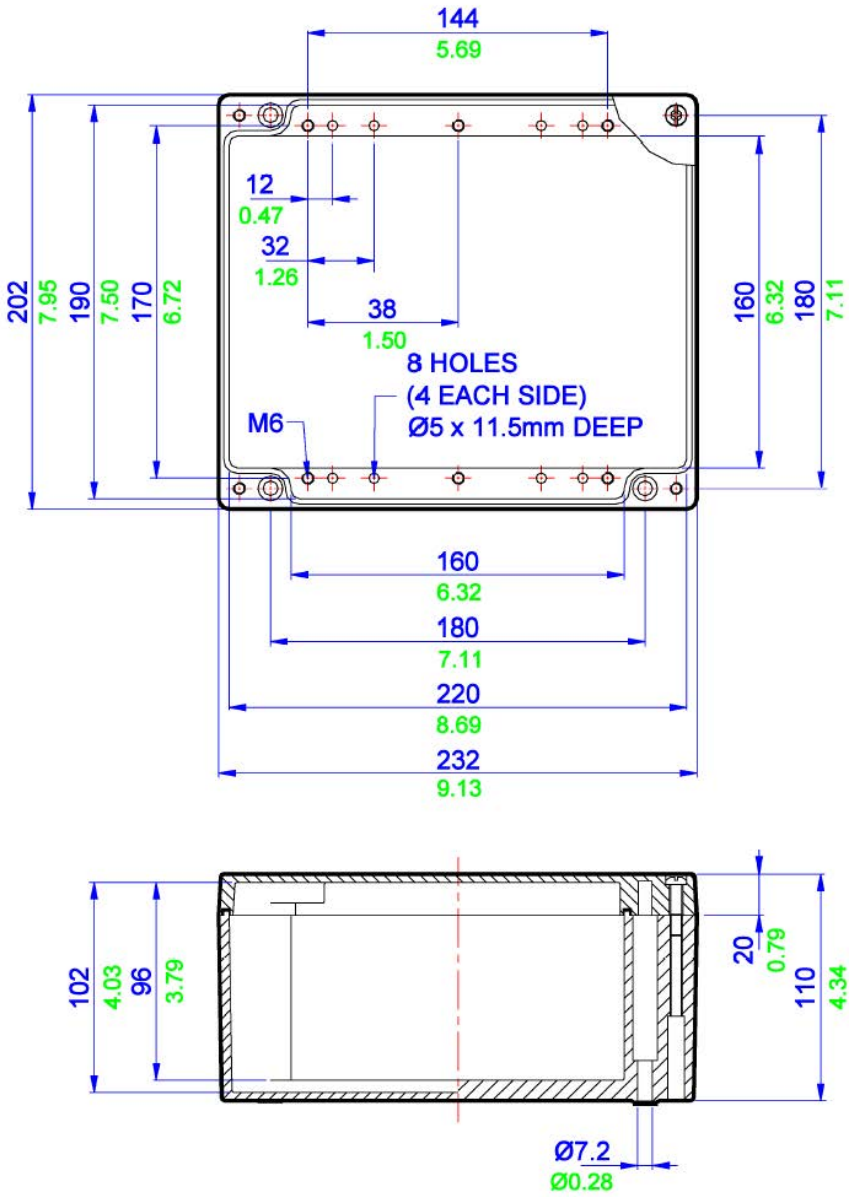

All **blue** dimensions in mm, all **green** dimensions in decimal inches (drawing not to scale)

ZAG16 / ZAG16R Die Cast Aluminium Enclosures IP66

Application
Industrial and Hazardous areas

Protection Degree
IP66

Certification
ATEX and IECEx:
- Ex ia (Zone 0) and Ex ta (Zone 20)
- Ex e Ex ib (Zone 1) and Ex tb (Zone 21)
- Ex nA (Zone 2) and Ex tc (Zone 22)

CSA Ex e (Class 1, Zone 1)

FM AEx e (Class 1, Zone 1)

TYPE 4X (CSA, FM, UL)

TR CU

Material
Precision Cast AISI12 (LM24) Aluminium Alloy

Temperature Rating
-65° to 150° C (-85° to 302° F)*
*Refer to certificate for further details

Power Rating
14.000W

Terminal Populations (Maximum Number of Rails = 3)

Calculations do not include the use of end stops, end plates and separators. Check that the enclosure can accommodate the cable bending radius and that the earth stud and entry location will permit the required number of terminals to be fitted

Weidmuller	
BK4 (4 way)	16
BK6 (6 way)	12
BK12 (12 way)	6
MK 6/3	14
MK 6/4	12
MK 6/6	8
SAK 2.5	96
SAK 4	88
SAK 6N	72
SAK 10	58
SAK 16	48
SAK 35	36

Entrelec	
MA2.5/5	114
M4/6	96
M6/8	72
M10/10	58
M16/12	48
M35/16	36

Wago	
280-992	108
280-999	108
281-691	92
281-992	92
281-993	92
282-691	72
284-691	56
283-691	24
285-691	16
280-998	108
281-998	92
264-120	96
264-220	56
264-132(2)	20
264-134(4)	14
262-132(2)	20
264-134(4)	12

Drilling Envelope Dimensions (mm)

	Side A - C	Side B - D
Width	284	150
Height	85	76

Gland Entry Matrix *

Size	Side A - C	Side B - D
M16	21	8
M20	14	6
M25	10	3
M32	4	2
M40	4	2

* Using standard gland clearances

Specifications

Part Number	Material	Width (mm)	Length (mm)	Depth (mm)	Weight (g)
ZAG16	Painted Aluminium (RAL7001)	330	230	110	4270
ZAG16R	Unpainted Aluminium	330	230	110	4270

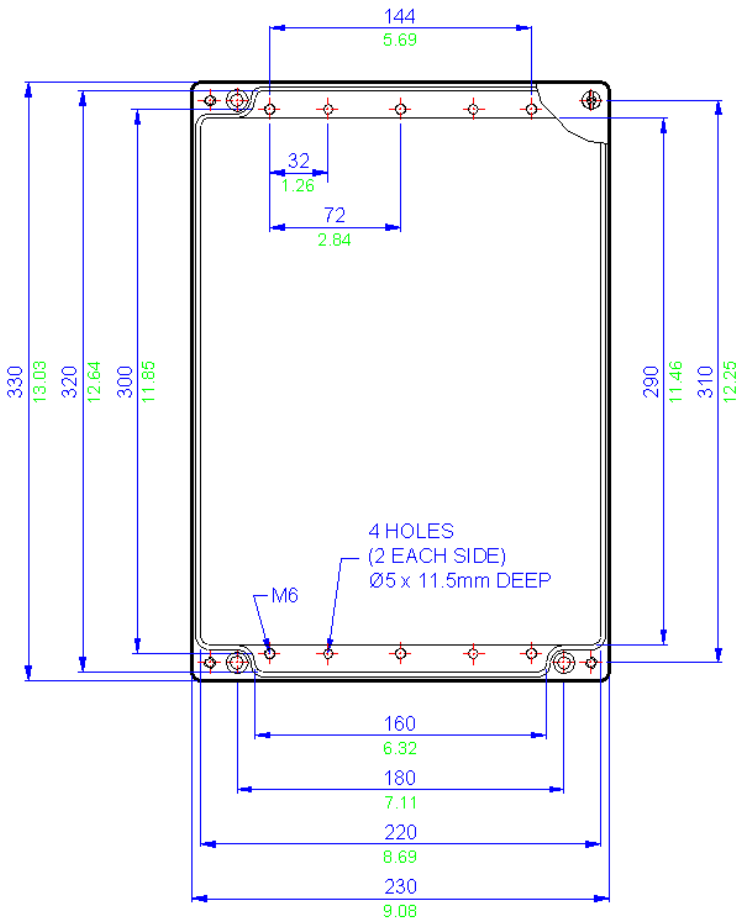

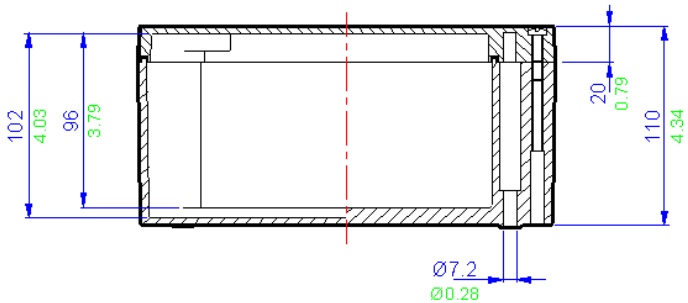

All **blue** dimensions in mm, all **green** dimensions in decimal inches (drawing not to scale)

ZAG21 / ZAG21R Die Cast Aluminium Enclosures IP66

Application
Industrial areas

Protection Degree
IP66

Certification
Not applicable

Material
Precision Cast AlSI12 (LM24) Aluminium Alloy

Temperature Rating
-65° to 150° C (-85° to 302° F)*
*Refer to certificate for further details

Power Rating
8.000W

Terminal Populations (Maximum Number of Rails = 3)

Calculations do not include the use of end stops, end plates and separators. Check that the enclosure can accommodate the cable bending radius and that the earth stud and entry location will permit the required number of terminals to be fitted

Weidmuller	
BK4 (4 way)	9
BK6 (6 way)	6
BK12 (12 way)	3
MK 6/3	6
MK 6/4	6
MK 6/6	4
SAK 2.5	52
SAK 4	48
SAK 6N	40
SAK 10	32
SAK 16	26
SAK 35	0

Entrelec	
MA2.5/5	63
M4/6	52
M6/8	40
M10/10	32
M16/12	26
M35/16	0

Wago	
280-992	58
280-999	58
281-691	50
281-992	50
281-993	50
282-691	39
284-691	31
283-691	26
285-691	0
280-998	58
281-998	50
264-120	52
264-220	31
264-132(2)	11
264-134(4)	7
262-132(2)	10
264-134(4)	7

Drilling Envelope Dimensions (mm)

	Side A - C	Side B - D
Width	320	60
Height	56	47

Gland Entry Matrix *

Size	Side A - C	Side B - D
M16	12	1
M20	8	1
M25	7	1
M32	0	0
M40	0	0

* Using standard gland clearances

Specifications

Part Number	Material	Width (mm)	Length (mm)	Depth (mm)	Weight (g)
ZAG21	Painted Aluminium (RAL7001)	120	360	80	2050
ZAG21R	Unpainted Aluminium	120	360	80	2050

Technical Drawing

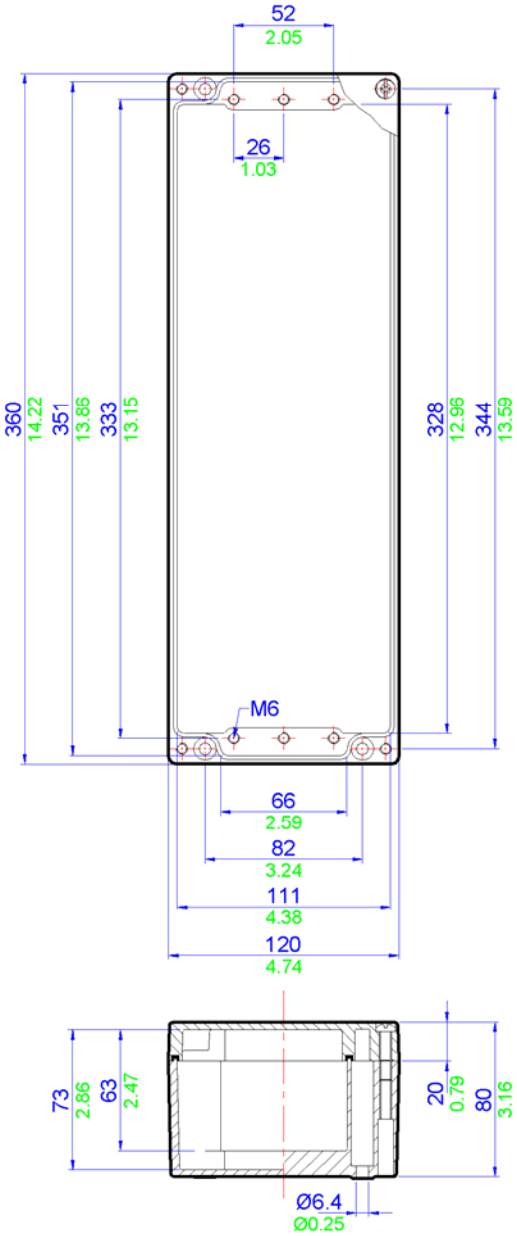

All **blue** dimensions in mm, all **green** dimensions in decimal inches (drawing not to scale)

High Voltage

For many years, ABTECH have been at the forefront in the design and manufacture of high voltage connection solutions for use in hazardous areas.

Through constantly listening to customers needs, the range has been developed and expanded to the five major ranges shown in this section. Different sizes and options result in more than 50 combinations to choose from.

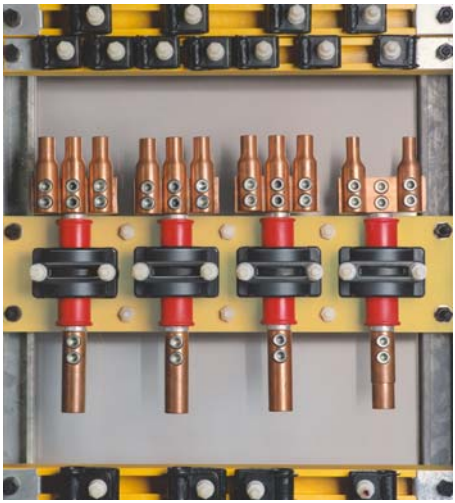

All ABTECH high voltage enclosures are manufactured in 316 grade stainless steel and have an IP rating of IP66 as standard. IP67 versions are also available.

All enclosures are ATEX certified for use in a Category 2/Zone 1 areas and Category 3/Zone 2 areas. Where appropriate IECEx is also available.

The entire range offers flexibility in terms of both connection options and mounting arrangements.

New variations are continually being added to the High Voltage range. For example, we can now offer Category 2/Zone 1 high voltage enclosures capable of operation at 45kV.

Whatever your requirement may be for high voltage connections in hazardous areas, call ABTECH for the solution.

Our High Voltage ranges currently consist of the following types;

MJB Range

The MJB range provides a simple, low cost but effective solution for the connection of cables. Used primarily for joining cables or as a connection box. Maximum voltage 8.3kV.

DPJB Range

The original high voltage 'down hole pump' connection box which has been used by many customers all over the world.

HVJB Range

The latest in the High Voltage range offering enhanced flexibility over the choice of cables, entries and cable terminations. Maximum voltage 45kV with the 4TJB enclosure.

LR Range

The LR range was originally designed for a specialist application for a specific customer. However, this type of enclosure has since been used in more general applications where a need for the flexible connection arrangements is required. Maximum voltage 3.3kV

Busbar Box

A busbar enclosure with a maximum voltage of 11kV, a current capacity of 3200A per phase and a fault rating of 90kA for 1 second. Capable of connecting 3 phase & neutral and up to 6 cables per phase.

SX125 Box

A unique solution to the termination of umbilical cables to offshore platform or on-shore distribution systems. A power conductor compartment is provided for use at up to 11 kV and a separate control compartment for terminating optical fibres and/or control conductors.

MJB Range

High Voltage Enclosures

8.3kV

Application
Hazardous areas

Protection Degree
IP66 or 67

Certification
ATEX Ex e (Zone 1 & Zone 2) to BS EN 60079-7
ATEX Ex nA (Zone 2) to BS EN 60079-15
ATEX Ex nR (Zone 2) to BS EN60079-15
NEMA 4X (CSA, UL & FM) Class 1 Division 2
Deluge Tested to DTS-01

Material
Stainless steel 316 (1.4404)

Temperature Rating
Standard: -50º C to 65º C (-58º to 149º F)

Maximum Voltage
8.3 kV

Specifications

Part Number	Width (mm) (Dimension B)	Height (mm) (Dimension A)	Depth (mm)	Dimension C (mm)	Dimension D (mm)	Power Rating (W)	Maximum Voltage (kV)	Maximum Ways	Maximum Conductor Size (mm^2)
MJB5	510	510	200/300	560	360	16	6.6	3	120
MJB5/3	510	510	300	560	360	16	8.3	3	35
MJB6	510	780	200/300	560	580	23	6.6	3	120
MJB6/3	510	780	300	560	580	23	8.3	3	35
MJB7	650	950	200/300	700	750	33	6.6	4	240
MJB7/3	650	950	300	700	750	33	8.3	4	240
MJB8	800	1250	200/300	850	1050	50	6.6	4	240
MJB8/3	800	1250	200/300	850	1050	50	8.3	4	240

Technical Drawing

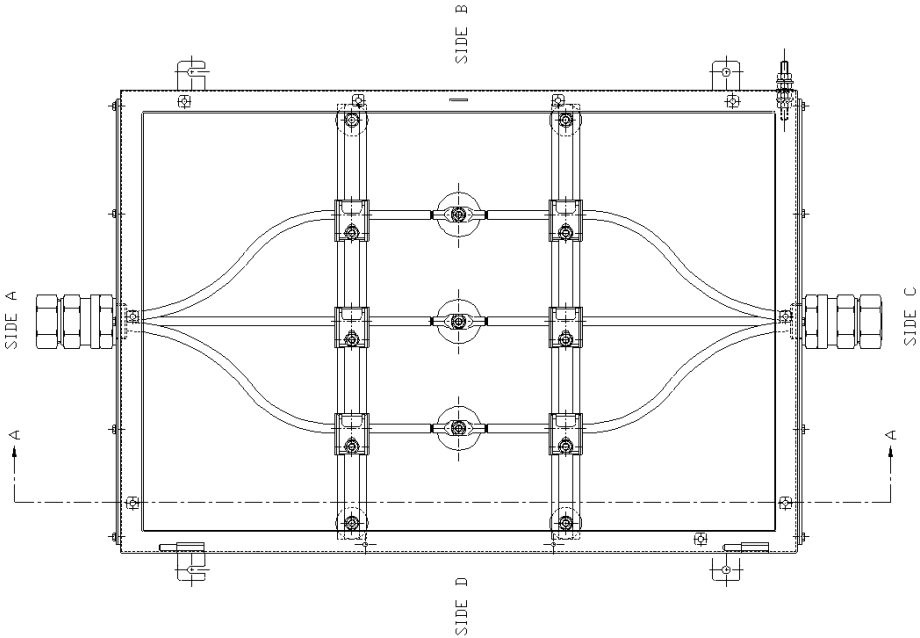

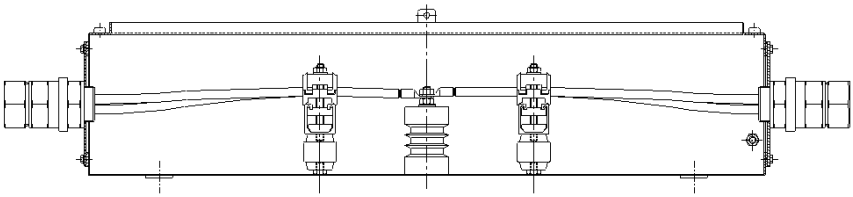

DPJB Range

High Voltage Enclosures

11kV

Application
Hazardous areas

Protection Degree
IP66 or 67

Certification
ATEX Ex e (Zone 1 & Zone 2) to BS EN 60079-7
NEMA 4X (CSA, UL & FM) Class 1 Division 2
Deluge Tested to DTS-01

Material
Stainless steel 316 (1.4404)

Temperature Rating
Standard: -20° to 55° C (-4° to 131° F)

Maximum Voltage
11 kV

Fault Rating
50kA for 1 second

Specifications

Part Number	Width (mm) (Dimension B)	Height (mm) (Dimension A)	Depth (mm)	Power Rating (W)	Maximum Voltage (kV)	Maximum Ways	Max. Conductor Size (mm²)
DPJB1	650	950	200	48.6	6.6	3	630
DPJB3	650	950	200	48.6	6.6	4	630
DPJB5	800	1250	300	48.6	6.6	3	630
DPJB7	800	1250	300	48.6	6.6	4	630
DPJB9	800	1250	300	48.6	11	3	630
DPJB11	800	1250	300	48.6	11	4	630
DPJB2	650	950	200	50.0	6.6	4	120

Notes

The DPJB utilises the SX7 and SX8 enclosures in either 200 or 300mm depth, depending on the operating voltage. By using the SX range design the same benefits are afforded to the DPJB range. These benefits include: ingress protection to IP66 as standard with IP67 available as an option, enclosure tested to the Shell/ERA deluge specification, heavy duty construction, padlock facility and internal/external earth stud fitted as standard. A double compartment version is available with a separate compartment which can be used to terminate control cables or fibre optic cables. This allows access to the low voltage/ fibre compartment without having to de-energise the high voltage compartment. Versions are also available with purge protection for use in Class 1/Division 2 areas. Phase segregation is fitted as standard. The DPJB range can be used as either a through box or with both the incoming and outgoing cable entering via one end. In the later instance it is important to consider the bending radii of the cables to ensure the enclosure is large enough

Spare copper crimp lugs are available from ABTECH to allow repairs or re-use of the enclosure. Please contact the Sales Department for further details.

Technical Drawing

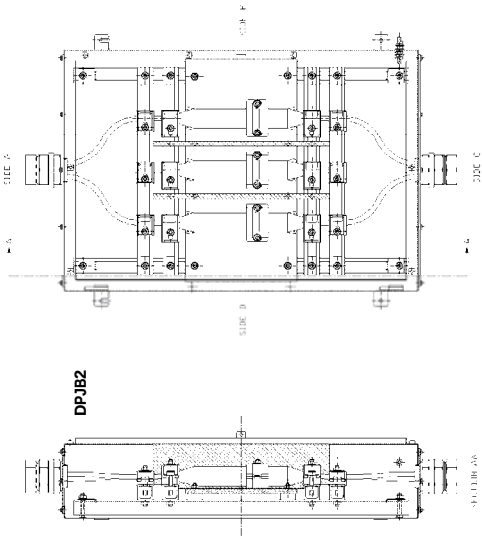

DPJB2

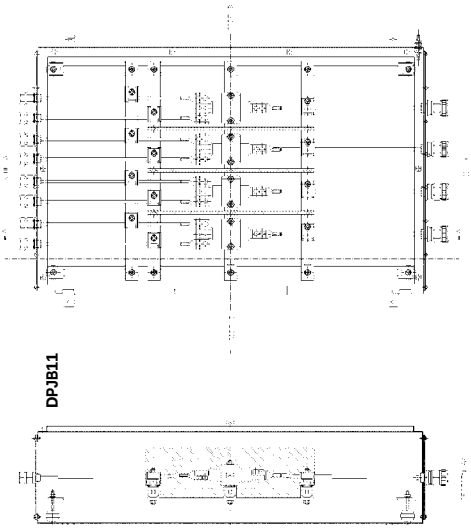

DPJB11

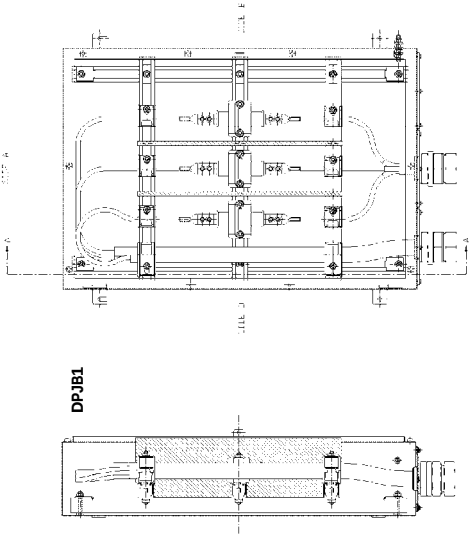

DPJB1

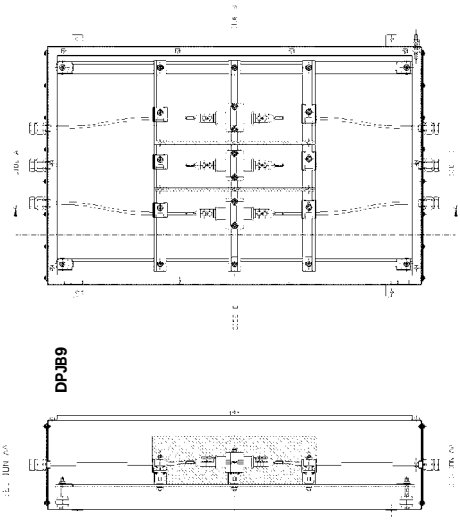

DPJB9

HVJB Range

High Voltage Enclosures

11kV

Application
Hazardous areas

Protection Degree
IP66 or 67

Certification
ATEX Ex e (Zone 1 & Zone 2) to BS EN 60079-7
IECEx Ex e (Zone 1 & Zone 2)
NEMA 4X (CSA, UL & FM) Class 1 Division 2
Deluge Tested to DTS-01

Material
Stainless steel 316 (1.4404)

Temperature Rating
Standard: -20° to 40° C (-4° to 104° F)
Option: -50° to 55° C (-58° to 131° F)

Maximum Voltage
11 kV

Specifications

Part Number	Maximum Current (A)	Maximum Voltage (kV)	Maximum Ways	Top Cables	Bottom Cables	Max. Conductor Size (mm²)
HVJB x3 (0-2)	980	11	3	0	2	630
HVJB x3 (0-3)	980	11	3	0	3	630
HVJB x3 (2-0)	980	11	3	2	0	630
HVJB x3 (3-0)	980	11	3	3	0	630
HVJB x3 (1-1)	980	11	3	1	1	630
HVJB x3 (1-2)	980	11	3	1	2	630
HVJB x3 (2-1)	980	11	3	2	1	630
HVJB x3 (2-2)	980	11	3	2	2	630
HVJB x3 (1-3)	980	11	3	1	3	630
HVJB x3 (3-1)	980	11	3	3	1	630
HVJB x3 (2-3)	980	11	3	2	3	630
HVJB x3 (3-2)	980	11	3	3	2	630
HVJB x3 (3-3)	980	11	3	3	3	630
HVJB x4 (0-2)	980	11	4	0	2	630
HVJB x4 (0-3)	980	11	4	0	3	630
HVJB x4 (2-0)	980	11	4	2	0	630
HVJB x4 (3-0)	980	11	4	3	0	630
HVJB x4 (1-1)	980	11	4	1	1	630
HVJB x4 (1-2)	980	11	4	1	2	630
HVJB x4 (2-1)	980	11	4	2	1	630
HVJB x4 (2-2)	980	11	4	2	2	630
HVJB x4 (1-3)	980	11	4	1	3	630
HVJB x4 (3-1)	980	11	4	3	1	630
HVJB x4 (2-3)	980	11	4	2	3	630
HVJB x4 (3-2)	980	11	4	3	2	630
HVJB x4 (3-3)	980	11	4	3	3	630

The letter 'x' in the Part Number above should be replaced with the number 7 or 8 depending on the size of enclosure required. 7 refers to an SX7 size enclosure measuring 650 x 950 x 300mm. 8 refers to an SX8 enclosure measuring 800 x 1250 x 300mm. If cables greater than 300mm² are used it is advisable to use the SX8 size enclosure. For voltages greater than 11kV enclosures are available to special order – please contact our Sales Department for further information.

Technical Drawing

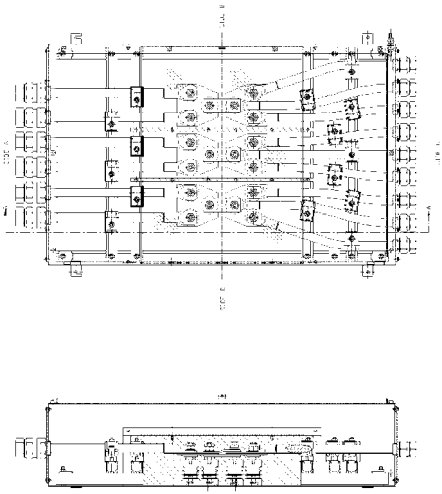

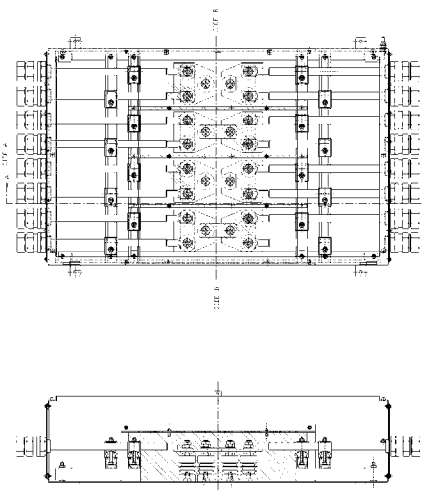

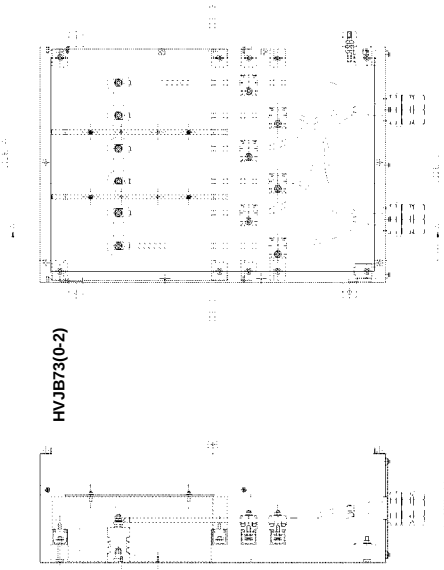

HVJB73(0-2)

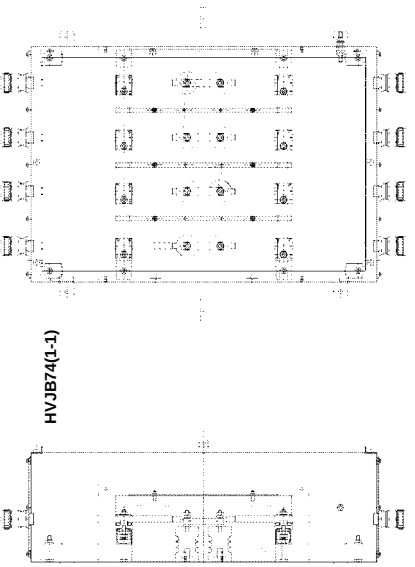

HVJB74(1-1)

LR Range

High Voltage Enclosures

3.3kV

Application
Hazardous areas

Protection Degree
IP66 or 67

Certification
ATEX Ex e (Zone 1 & Zone 2) to BS EN 60079-7
NEMA 4X (CSA, UL & FM) Class 1 Division 2
Deluge Tested to DTS-01

Material
Stainless steel 316 (1.4404)

Temperature Rating
T3: -50° to 55° C (-58° to 131° F)
T4: -50° to 40° C (-58° to 104° F)

Maximum Voltage
3.3 kV

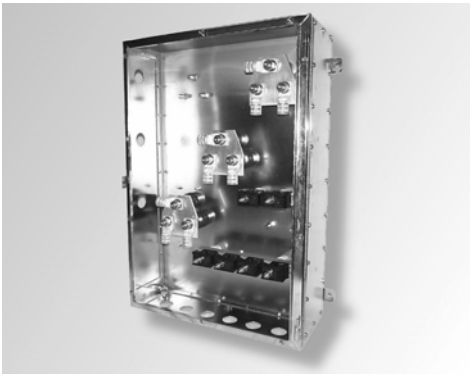

Specifications

Part Number	Width (mm)	Height (mm)	Depth (mm)	Maximum Current (A)	Maximum Voltage (kV)	Maximum Ways	Max. Conductor Size (mm²)
LR52(200)	510	510	200	1250	3.3	2	630
LR52(300)	510	510	300	1250	3.3	2	630
LR73(200)	650	950	200	1250	3.3	3	630
LR73(300)	650	950	300	1250	3.3	3	630

The LR52 version ATEX certification is based on the SX5-3GP-200 (3 gland plates, 200mm deep) and SX5-3GP-300 (3 gland plates, 300mm deep).
The LR73 version ATEX certification is based on the SX7-3GP-200 (3 gland plates, 200mm deep) and SX7-3GP-300 (3 gland plates, 300mm deep).
Other sizes are available on request.

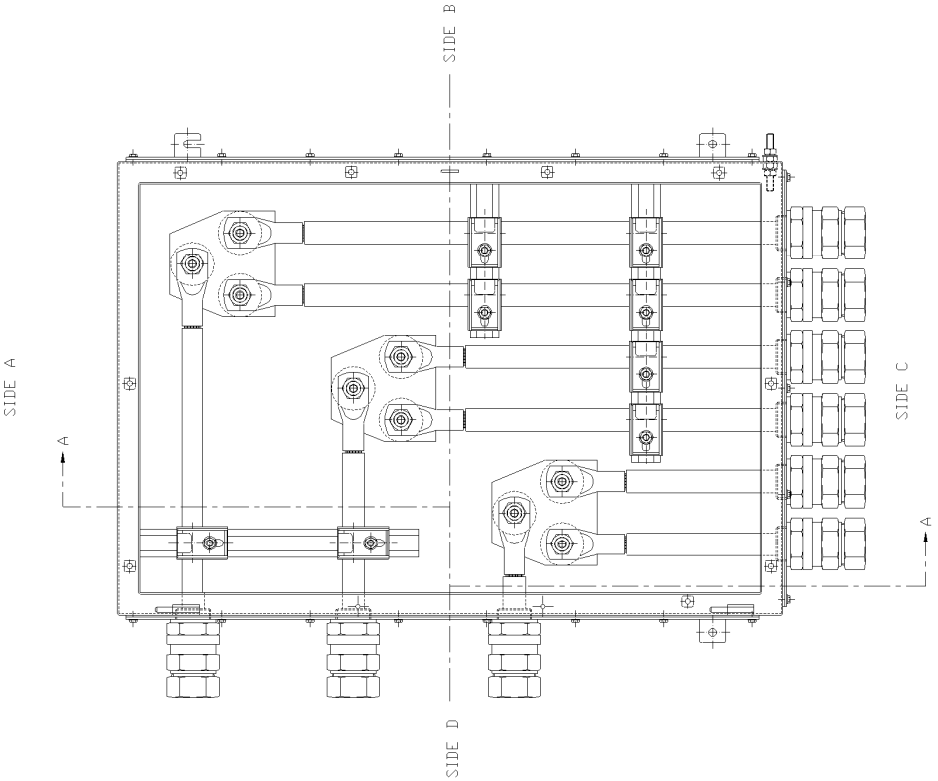
SIDE A
SIDE B
SIDE C
SIDE D
A
A

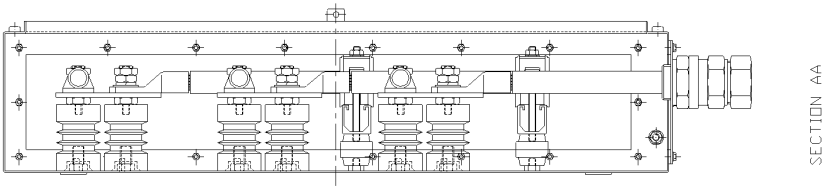
SECTION AA

Busbar Box

Application
Hazardous areas

Protection Degree
IP66 or 67

Certification
ATEX Ex e (Zone 1 & Zone 2) to BS EN 60079-7
IECEx Ex e (Zone 1 & 2)
NEMA 4X (CSA, UL & FM) Class 1 Division 2
Deluge Tested to DTS-01

Material
Stainless steel 316 (1.4404)

Temperature Rating
T5: -40° to 40° C (-40° to 104° F)
T6: -40° to 60° C (-40° to 149° F)

Maximum Voltage
11 kV

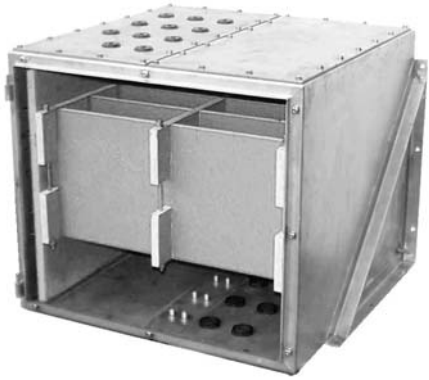

Specifications

Part Number	Maximum Width (mm)	Maximum Height (mm)	Maximum Depth (mm)	Maximum Current (A)	Maximum Voltage (kV)	Maximum Ways	Maximum Conductors per Way	Maximum Ways	Max. Conductor Size (mm²)
Busbar Box	770	770	1250	3000	11	4	6	4	1000

Notes

The ABTECH Busbar box is used for the connection of cables or equipment where the conductor size and number of cables being connected would make it very difficult in any other ABTECH High Voltage range.

The Bus-Bar box is ideally suited for conductor sizes over 400mm², as the design allows cables to enter the enclosure and be terminated onto the busbar without having to be bent. This makes for quick and easy installation in applications which have normally been considered difficult to accomplish.

Although not based on a particular size of standard enclosure, the Bus-Bar box utilises the SX range features and is consequently afforded the same benefits from the use of these. These benefits include: ingress protection to IP66 as standard with IP67 available as an option, heavy duty construction, padlock facility and an internal/external earth stud fitted as standard. Additionally, the Bus-Bar box incorporates heavy duty mounting facilities which can be adapted to suit the customer's requirements.

Technical Drawing

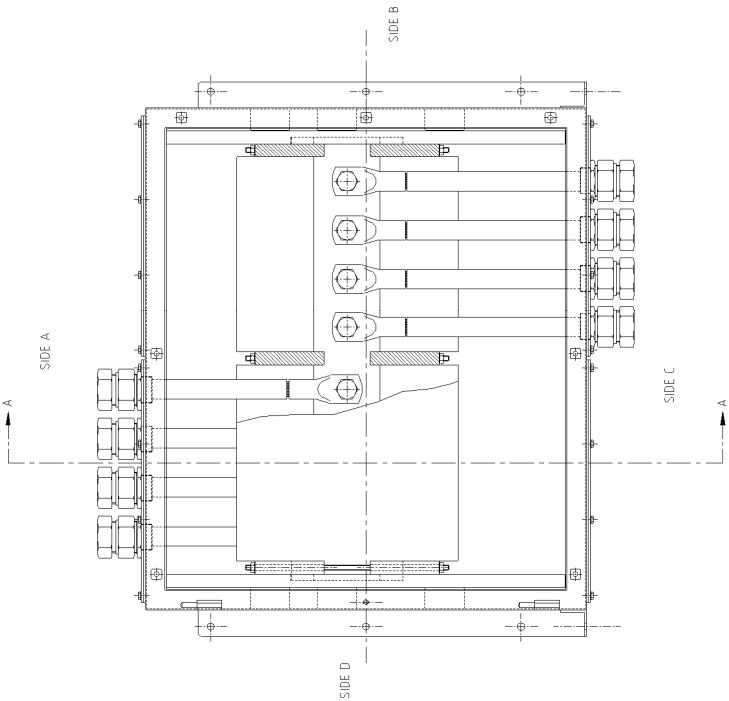

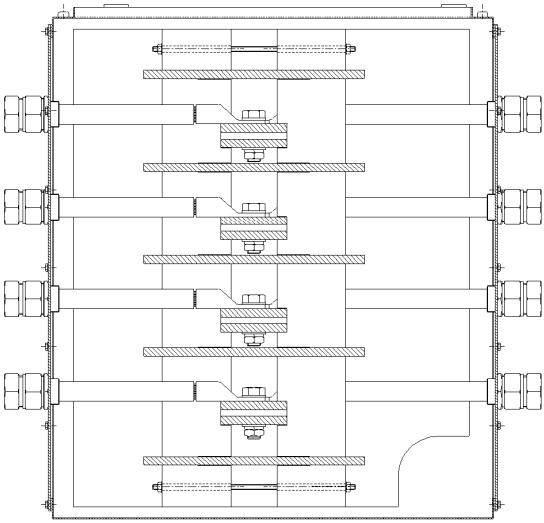

SX125 Range

High Voltage Enclosures

11kV

Application
Hazardous areas

Protection Degree
IP66

Certification
ATEX Ex e (Zone 1 & Zone 2) to BS EN 60079-7
NEMA 4X (CSA, UL & FM) Class 1 Division 2

Material
Stainless steel 316 (1.4404)

Temperature Rating
Standard: -20º to 55º C (-4º to 131º F)

Maximum Voltage
11 kV

Notes

The SX125 provides a unique solution to the termination of umbilical cables to offshore platform or on-shore distribution systems. Based on the successful and service proven SX range, they are available as either a left hand or right hand configuration. A power conductor compartment is provided for use at up to 15 kV and a separate control compartment for terminating optical fibres and/or control conductors. For voltages greater than 15kV enclosures are available to special order – please contact our Sales Department for further information

Each compartment gives independent protection to IP 66. This facilitates working on the optical fibres or control conductors without the need to isolate the feed to the power compartment.

The SX125 is available with either 3 couplers or 4 couplers, each capable of connecting up to 3 power conductors. In the control compartment there is the option to mount the optical fibre splice cassettes either directly onto a chassis plate or inside an additional Ex'e' certified enclosure for increased environmental protection. Terminals for control conductors can be treated in the same manner as optical fibres. For higher voltage applications the SX125 is available with a purging system.

HVJB 125

For high current applications the HVJB 125 was developed as an extension to the SX125 range.
Offering all the facilities of the SX125 the HVJB 125 adds the facility for a suitably certified anti-condensation heater.

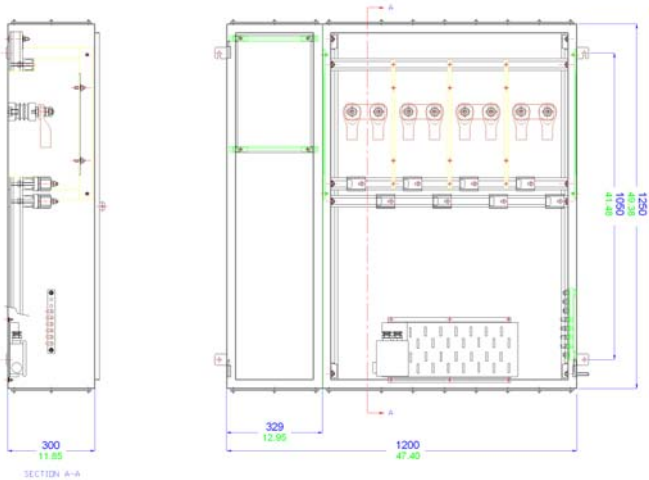

SX125 LH

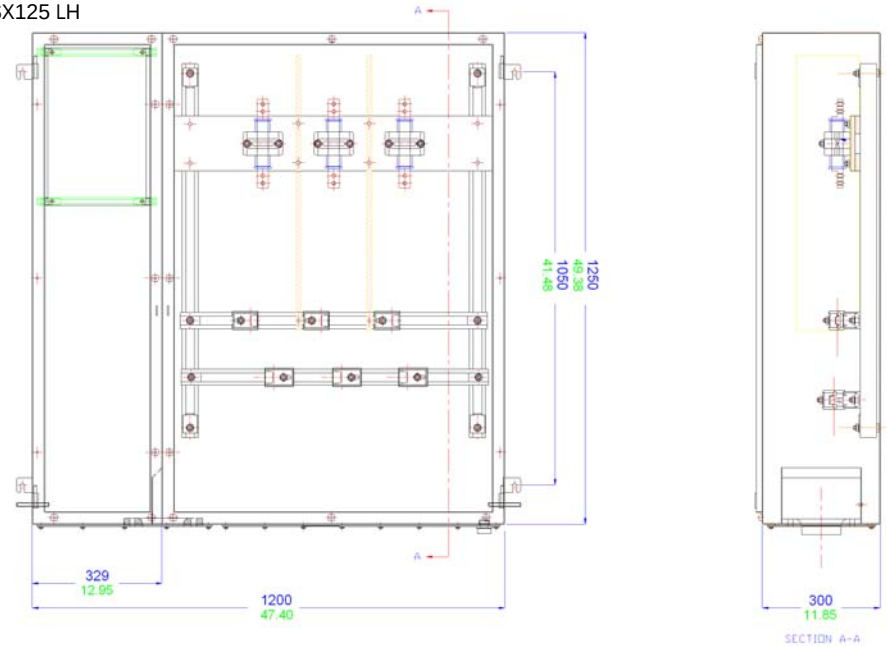

SX125 RH

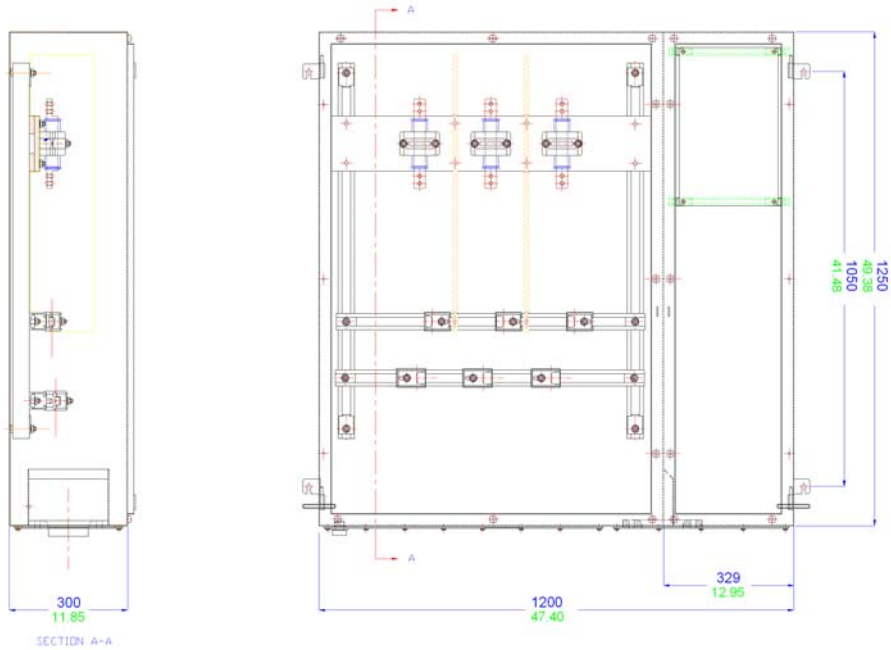

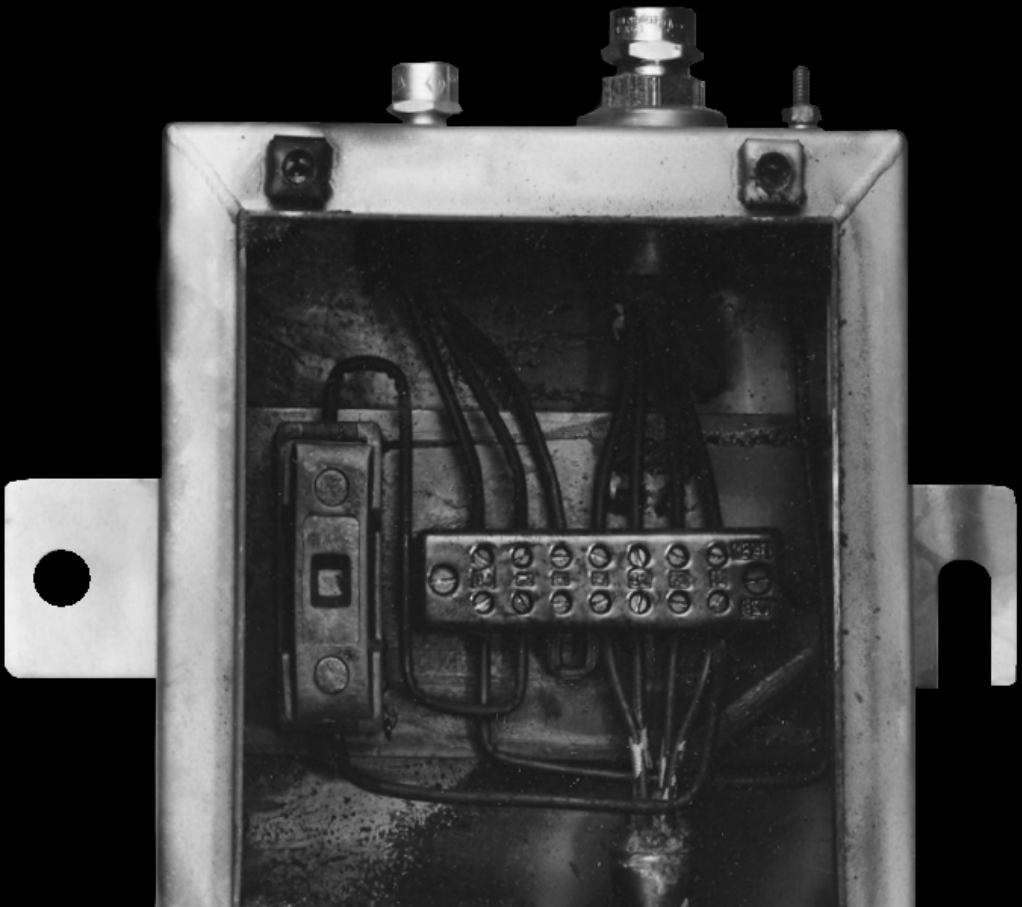

Fire Rated

Fire Testing of Junction Boxes

When installing essential systems such as emergency lighting or fire safety controls, great emphasis is placed upon the fire survivability of the critical components such as fire dampers, actuators and cables that are contained in the area. Often the specification of the junction boxes is neglected with respect to fire survival. On the basis that any system is only as good as the weakest part, it is important that attention is paid to the junction boxes being utilised for essential systems. ABTECH have many years experience of ensuring the fire survival of junction boxes using both the SX and BPG ranges. We have supplied major projects worldwide with fire rated junction boxes including the Channel Tunnel, Dartford Tunnel and the Tengiz Oil Refinery in Kazahkstan to name but a few.

Since there are no recognised tests applicable to junction boxes, it was decided to test the enclosures to the same specification as the cable. At the time of the test (1990) the two main tests for electrical cables were IEC331/1970 and BS6387/1983.

In IEC331 a cable test is conducted in which the samples are subjected to flame at a temperature of 750°C (1382°F) for a period of 3 hours with the electrical system fully functional before, during, and after the test. This test was carried out on both the SX (stainless steel) and BPG (glass reinforced polyester) ranges containing nylon, melamine and ceramic terminals.

After the test it was found that the body of the nylon terminals had disappeared completely, the melamine body had taken on the appearance of biscuit (because the wood filling had burnt away) and only the ceramic bodied terminal appeared to be intact.

Without cleaning or disturbing the terminals in any way, a flash potential of 5kV was applied between the copper conductor and the terminal rail, which passed without break-down.

Since the IEC331 standard only partly dealt with the requirements of real-life situations, it was decided to conduct additional testing to an alternative standard – BS6387/1983.

This test is performed in a similar way to IEC331/1970 with the specimen under test being suspended 75mm (approximately 3") above a flame, the temperature of which is maintained at 950°C (1742°F) for 3 hours. During this period the cable and junction box is supplied with power. In order to pass the test, both components must be fully functioning after the period has elapsed.

On the successful conclusion of this test, which is designated "fire-alone" BS6387'C', the next test is to mount the sample (still powered-up) on a flat vertical surface and to apply flame at a temperature of 950°C (1742°F) (by means of a flame gun) whist at the same time striking the board on which the sample is mounted with a 25mm (1") diameter iron bar every 30 seconds for a period of 15 minutes. This is designated the "impact test" BS6387 'Z'.

Finally, a "fire with water test" is applied but only at a temperature of 650°C (1202°F). The sample is subjected to flame at 650°C for 15 minutes after which a water spray is applied for 15 minutes and at the culmination of this test the system is required to be completely functional, this test being designated BS6387 'W'.

The SX range of enclosures passed all the tests applicable to BS6387 i.e. C, Z & W however, it was decided that the BPG range would only be submitted to the flame test 'C', which it passed.

In conclusion, the ABTECH SX and BPG ranges, when fitted with ceramic terminals, are suitable for use in areas which are designated to require fire resistant cables. The type of enclosure to be used will depend on the individual circumstances of the area and advice on the most suitable enclosure should be sought from the ABTECH Technical Department.

Enclosure Type	IEC 331 750°C (1382°F) for 3 hours (Flame Only)	BS6387 'C' 950°C(1742°F) for 3 hours (Flame Only)	BS6387 'Z' 950°C (1742°F) for 3 hours (External Impact)	BS6387 'W' 950°C (1742°F) for 3 hours (Water Spray)
SX Range	Pass	Pass	Pass	Pass
BPG Range	Pass	Pass	Not Tested	Not Tested

SX Range Enclosure and Cables after IEC331 Fire Testing

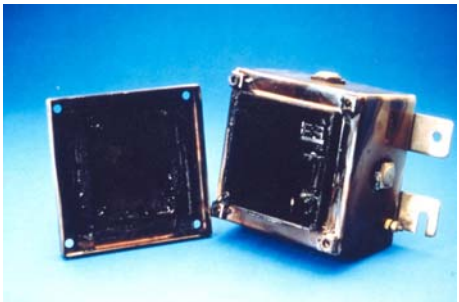

SX Range Enclosure after BS6387 Testing

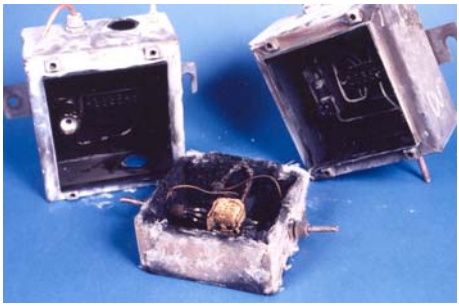

SX and BPG Range Enclosures after BS6387 Testing

ZP

ABS and Polycarbonate Enclosures

The ABTECH ZP range of enclosures comprises of 19 different sizes which are injection moulded in either ABS plastic or polycarbonate material. There is also an option of a clear polycarbonate lid which can be fitted to either base.

The enclosures are lightweight yet extremely robust and offer good protection against both corrosion and oil based contamination. The enclosure shares the labyrinth seal arrangement which is common to both the ZAG and BPG ranges and can offer protection up to IP65.

Stainless steel captive quick release quarter turn screws are fitted as standard offering a quick yet reliable method of securing the lid. This can provide a considerable cost saving in assembly times with on-average savings of 2 minutes per enclosure over conventional screws. As an option conventional threaded screws may be fitted if required.

The ZP range is an extremely versatile enclosure with many uses and applications including junction boxes, instrument enclosures and a multitude of OEM applications. The addition of the clear lid makes the ZP range particularly suitable for housing instruments and indicators where a visual indication is required without the need for opening the enclosure. The range can be machined, drilled and tapped with various thread forms and can also be silk screen printed. The ZP range can also be moulded in almost any colour subject to minimum quantities. At our factories in England, Germany and the United States we have specialist machining centres for the ZP range of enclosure.

These machines use the dedicated tooling and programming which is specific to the requirements of the material and reflect the increasing usage of this enclosure range, especially in small batch production.

Internal components are located via a series of moulded pillars which can be fitted with threaded inserts or alternatively can accept self tapping screws and these are used for the fitment of a component mounting plate or DIN standard terminal mounting rails such as TS 15, TS 32 or TS 35.

Earthing can be accomplished through various means. For example, an internal / external earth stud, which in turn can be connected to the terminal mounting rail or component plate can be used as well as various rail mounted earth terminals or proprietary earth bars which can be fitted inside the enclosure.

The screening against RFI (radio frequency interference) is achieved by the use of a metalised coating of 50 micron thickness to the internal surfaces of the enclosure and the fitment of an RFI gasket. The ABTECH Sales team can give advice on suitable RFI gaskets and finishing techniques which will provide optimum protection but typically the following characteristics are achievable:

Electrical Attenuation:
55 – 65dB @ 500MHz to 1000MHz

Magnetic Attenuation:
35dB @ 40KHz to 300MHz

ZP Range Features

- Wide Operating Temperature
- Ingress Protection up to IP65
- Available in Polycarbonate and ABS
- Optional Transparent lid
- Can be moulded any colour (subject to minimum quantities)
- Can be easily machined and silk screen printed
- Ideal for Instrument housings and junction boxes

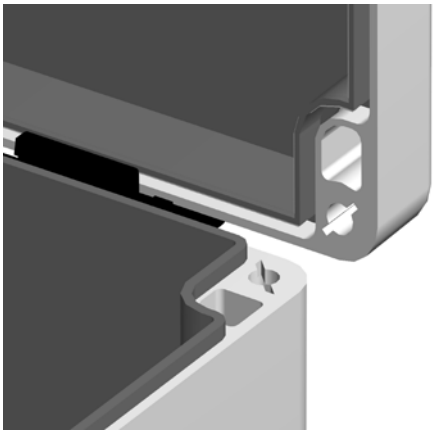

Accessories and Options

The following table is a list of the available accessories suitable for particular sizes of ZP enclosure.

Part Number	Width (mm)	Length (mm)	Depth (mm)	**P** (or no suffix) Polycarbonate	**ABS** - ABS	**T** - Transparent Lid (moulded polycarbonate)	**TS** - Threaded Lid Fixing Screws (see note 1)	**MP** - Component Mounting Plate	**EH** - External Hinges	**EB** - Internal Earthing Bar	**MF** - External Mounting Feet	**MR** - DIN Standard Mounting Rail	**RF** - RFI Protection (see note 2)
ZP1	52	50	35	●	●	●		●			●		●
ZP2	65	50	35	●	●	●	●	●			●	●	●
ZP3	82	80	55	●	●	●	●	●	●	●	●	●	●
ZP4	82	80	85	●	●	●	●	●	●	●	●	●	●
ZP5	120	80	55	●	●	●	●	●	●	●	●	●	●
ZP6	120	80	85	●	●	●	●	●	●	●	●	●	●
ZP7	160	80	55	●	●	●	●	●	●	●	●	●	●
ZP8	160	80	85	●	●	●	●	●	●	●	●	●	●
ZP9	122	120	55	●	●	●	●	●	●	●	●	●	●
ZP10	122	120	85	●	●	●	●	●	●	●	●	●	●
ZP11	200	120	75	●	●	●	●	●	●	●	●	●	●
ZP12	200	150	75	●	●	●	●	●	●	●	●	●	●
ZP13	240	120	100	●	●	●	●	●	●	●	●	●	●
ZP14	240	160	90	●	●	●	●	●	●	●	●	●	●
ZP15	250	160	90	●	●	●	●	●	●	●	●	●	●
ZP16	240	160	120	●	●	●	●	●	●	●	●	●	●
ZP17	300	230	85	●	●	●	●	●	●	●	●	●	●
ZP18	360	200	150	●	●	●	●	●	●	●	●	●	●
ZP19	300	230	110	●	●	●	●	●	●	●	●	●	●

Ordering Example;

ZP12 ABS MF

(ZP12 moulded in ABS material with External Mounting Feet)

1. Standard lid fixing screws are ¼ turn quick release type.
2. Radio Frequency Interference (RFI) gasket may reduce IP rating. Enclosure may also be internally coated with RFI material.

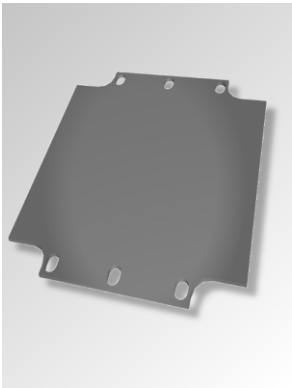

Component Mounting Plate
(tufnol as standard, steel an option)

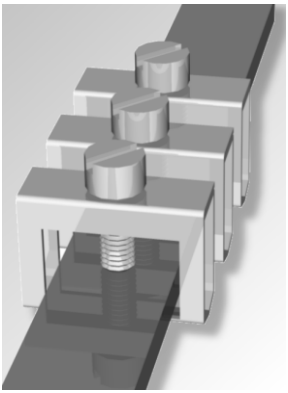

Internal Earthing Bar
(can be fitted with clamps)

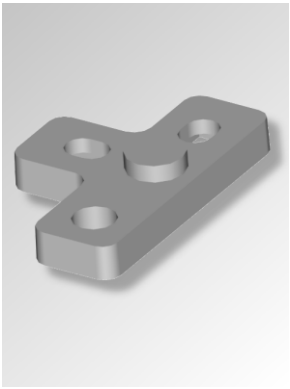

External Mounting Feet
(stainless steel 316)

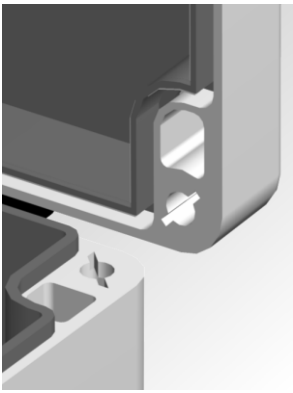

RFI Shielding
(metalised spray coating to interior)

External Hinges

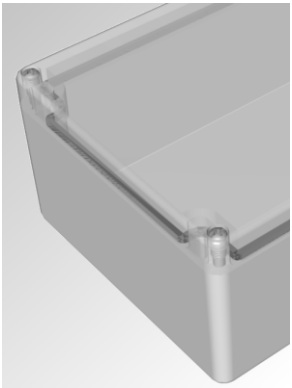

Transparent Lid
(moulded in polycarbonate)

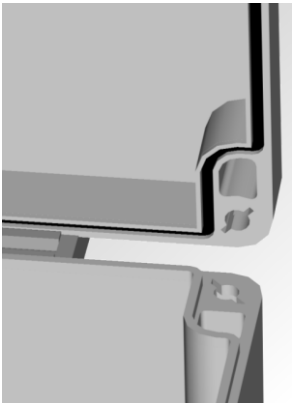

Lid Seal Gasket

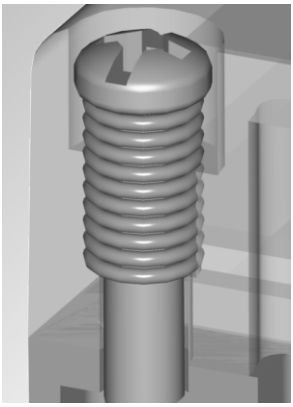

¼ Turn or Threaded Lid Fixing
Screws

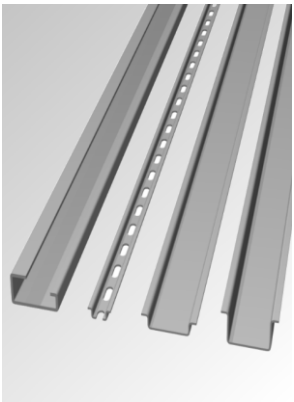

DIN Standard Mounting Rail
(TS 15, TS 32 or TS 35)

ZP1 / ZP1 ABS

ABS and Polycarbonate Enclosures

IP65

Application
Industrial areas

Protection Degree
IP65

Certification
NEMA Types 1, 4X, 12
UL

Material
Moulded Polycarbonate - grey (RAL7035) or
Moulded ABS – grey (RAL7035)

Temperature Rating
Polycarbonate versions:
-40˚ to 120˚ C (-94˚ to 248˚ F)
ABS versions:
-40˚ to 65˚ C (-94˚ to 149˚ F)

Power Rating
Not Applicable

Terminal Populations (Maximum Number of Rails = 0)

Calculations do not include the use of end stops, end plates and separators. Check that the enclosure can accommodate the cable bending radius and that the earth stud and entry location will permit the required number of terminals to be fitted

Weidmuller	
BK4 (4 way)	1
BK6 (6 way)	0
BK12 (12 way)	0
MK 6/3	0
MK 6/4	0
MK 6/6	0
SAK 2.5	0
SAK 4	0
SAK 6N	0
SAK 10	0
SAK 16	0
SAK 35	0

Entrelec	
MA2.5/5	0
M4/6	0
M6/8	0
M10/10	0
M16/12	0
M35/16	0

Phoenix	
G5\4 (4 way)	1
G5\6 (6 way)	0
G5\12 (12 way)	0
UK3 N	0
UK5 N	0
UK10 N	0
UK16 N	0
UK35 N	0

Drilling Envelope Dimensions (mm)

	Side A - C	Side B - D
Width	28	26
Height	22	22

Gland Entry Matrix *

Size	Side A - C	Side B - D
M12	1	1
M16	0	0
M20	0	0
M25	0	0
M32	0	0
M40	0	0

* Using standard gland clearances

Specifications

Part Number	Material	Width (mm)	Length (mm)	Depth (mm)	Weight (g)
ZP1	Polycarbonate (RAL7035)	52	50	35	40
ZP1 ABS	ABS (RAL7035)	52	50	35	38

Technical Drawing

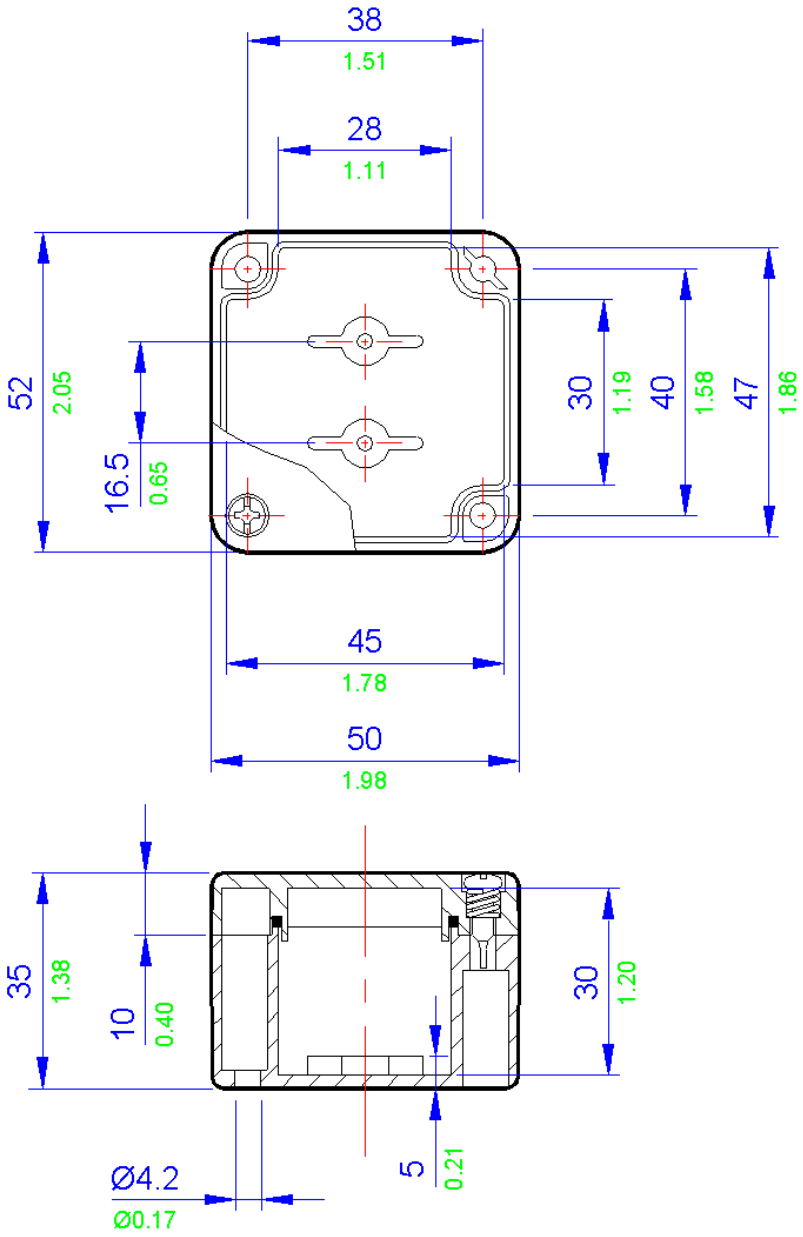

All **blue** dimensions in mm, all **green** dimensions in decimal inches (drawing not to scale)

ZP2 / ZP2 ABS

ABS and Polycarbonate Enclosures

IP65

Application
Industrial areas

Protection Degree
IP65

Certification
NEMA Types 1, 4X, 12
UL

Material
Moulded Polycarbonate - grey (RAL7035) or
Moulded ABS – grey (RAL7035)

Temperature Rating
Polycarbonate versions:
-40˚ to 120˚ C (-94˚ to 248˚ F)
ABS versions:
-40˚ to 65˚ C (-94˚ to 149˚ F)

Power Rating
Not Applicable

Terminal Populations (Maximum Number of Rails = 1)

Calculations do not include the use of end stops, end plates and separators. Check that the enclosure can accommodate the cable bending radius and that the earth stud and entry location will permit the required number of terminals to be fitted

Weidmuller	
BK4 (4 way)	1
BK6 (6 way)	0
BK12 (12 way)	0
MK 6/3	0
MK 6/4	0
MK 6/6	0
SAK 2.5	0
SAK 4	0
SAK 6N	0
SAK 10	0
SAK 16	0
SAK 35	0

Entrelec	
MA2.5/5	0
M4/6	0
M6/8	0
M10/10	0
M16/12	0
M35/16	0

Phoenix	
G5\4 (4 way)	1
G5\6 (6 way)	0
G5\12 (12 way)	0
UK3 N	0
UK5 N	0
UK10 N	0
UK16 N	0
UK35 N	0

Drilling Envelope Dimensions (mm)

	Side A - C	Side B - D
Width	41	26
Height	22	22

Gland Entry Matrix *

Size	Side A - C	Side B - D
M12	2	1
M16	0	0
M20	0	0
M25	0	0
M32	0	0
M40	0	0

* Using standard gland clearances

Specifications

Part Number	Material	Width (mm)	Length (mm)	Depth (mm)	Weight (g)
ZP2	Polycarbonate (RAL7035)	65	50	35	50
ZP2 ABS	ABS (RAL7035)	65	50	35	48

Technical Drawing

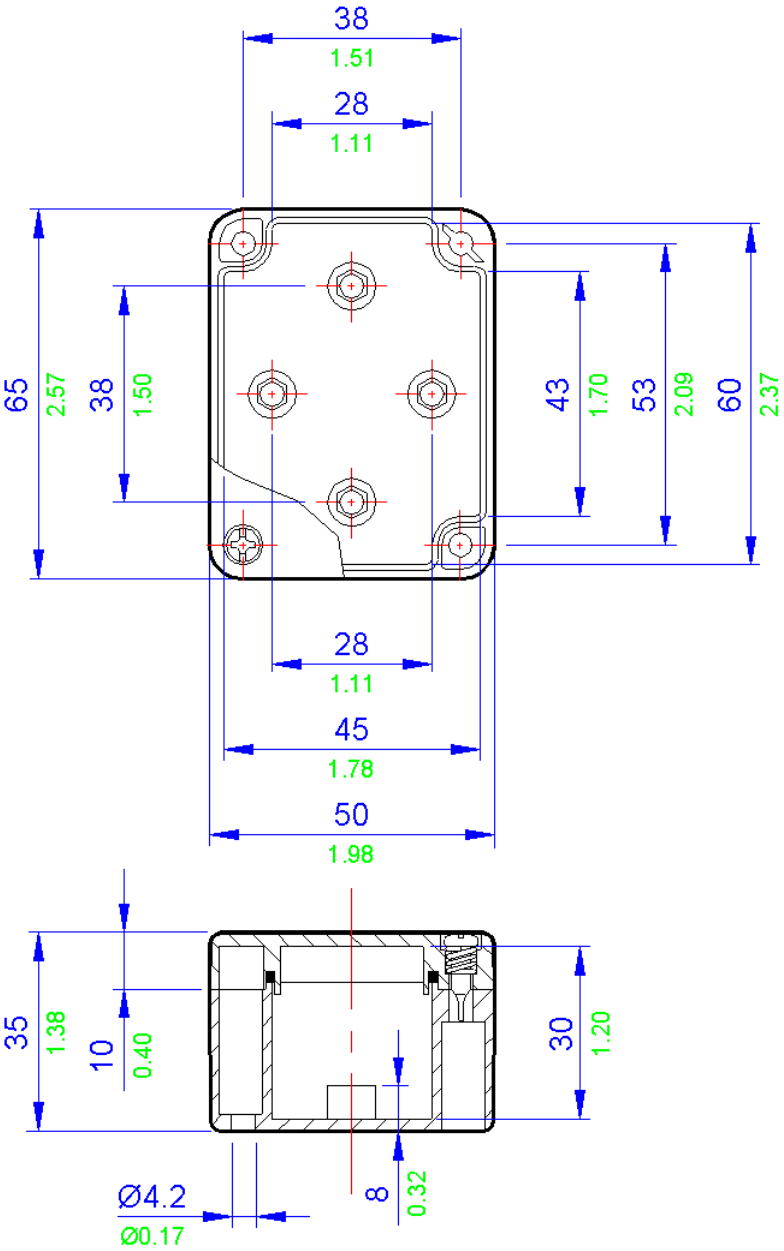

All **blue** dimensions in mm, all **green** dimensions in decimal inches (drawing not to scale)

ZP3 / ZP3 ABS

ABS and Polycarbonate Enclosures

IP65

Application
Industrial areas

Protection Degree
IP65

Certification
NEMA Types 1, 4X, 12
UL

Material
Moulded Polycarbonate - grey (RAL7035) or
Moulded ABS – grey (RAL7035)

Temperature Rating
Polycarbonate versions:
-40˚ to 120˚ C (-94˚ to 248˚ F)
ABS versions:
-40˚ to 65˚ C (-94˚ to 149˚ F)

Power Rating
Not Applicable

Terminal Populations (Maximum Number of Rails = 1)

Calculations do not include the use of end stops, end plates and separators. Check that the enclosure can accommodate the cable bending radius and that the earth stud and entry location will permit the required number of terminals to be fitted

Weidmuller	
BK4 (4 way)	2
BK6 (6 way)	1
BK12 (12 way)	0
MK 6/3	0
MK 6/4	0
MK 6/6	0
SAK 2.5	0
SAK 4	0
SAK 6N	0
SAK 10	0
SAK 16	0
SAK 35	0

Entrelec	
MA2.5/5	0
M4/6	0
M6/8	0
M10/10	0
M16/12	0
M35/16	0

Phoenix	
G5\4 (4 way)	2
G5\6 (6 way)	1
G5\12 (12 way)	0
UK3 N	0
UK5 N	0
UK10 N	0
UK16 N	0
UK35 N	0

Drilling Envelope Dimensions (mm)

	Side A - C	Side B - D
Width	56	36
Height	29	29

Gland Entry Matrix *

Size	Side A - C	Side B - D
M12	3	1
M16	0	0
M20	0	0
M25	0	0
M32	0	0
M40	0	0

* Using standard gland clearances

Specifications

Part Number	Material	Width (mm)	Length (mm)	Depth (mm)	Weight (g)
ZP3	Polycarbonate (RAL7035)	82	80	55	150
ZP3 ABS	ABS (RAL7035)	82	80	55	148

Technical Drawing

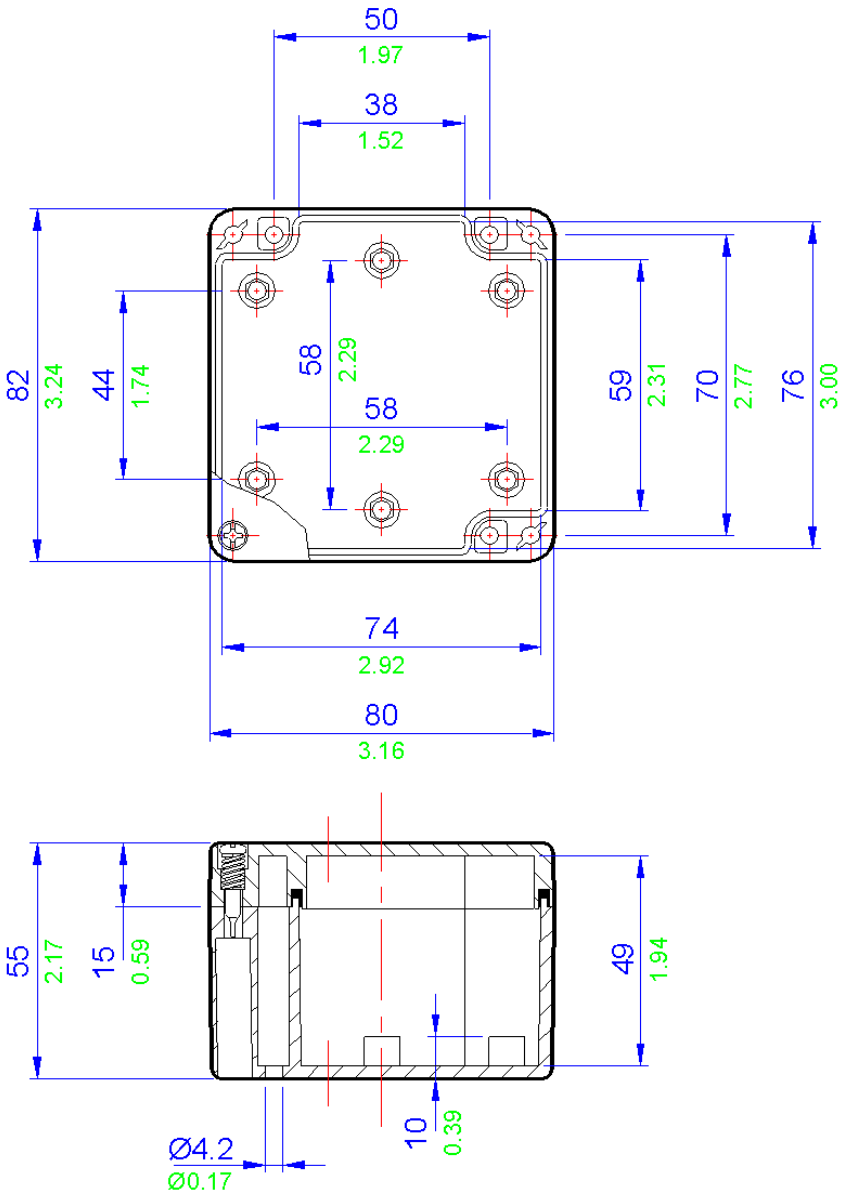

All **blue** dimensions in mm, all **green** dimensions in decimal inches (drawing not to scale)

ZP4 / ZP4 ABS

ABS and Polycarbonate Enclosures

IP65

Application
Industrial areas

Protection Degree
IP65

Certification
NEMA Types 1, 4X, 12
UL

Material
Moulded Polycarbonate - grey (RAL7035) or
Moulded ABS – grey (RAL7035)

Temperature Rating
Polycarbonate versions:
-40˚ to 120˚ C (-94˚ to 248˚ F)
ABS versions:
-40˚ to 65˚ C (-94˚ to 149˚ F)

Power Rating
Not Applicable

Terminal Populations (Maximum Number of Rails = 1)

Calculations do not include the use of end stops, end plates and separators. Check that the enclosure can accommodate the cable bending radius and that the earth stud and entry location will permit the required number of terminals to be fitted

Weidmuller		Entrelec		Phoenix	
BK4 (4 way)	2	MA2.5/5	6	G5\4 (4 way)	2
BK6 (6 way)	1	M4/6	5	G5\6 (6 way)	1
BK12 (12 way)	0	M6/8	3	G5\12 (12 way)	0
MK 6/4	1	M10/10	3	UK3 N	6
MK 6/6	0	M16/12	1	UK5 N	5
SAK 2.5	5	M35/16	0	UK10 N	3
SAK 4	5			UK16 N	2
SAK 6N	4			UK35 N	0
SAK 10	3				
SAK 16	2				
SAK 35	0				

Drilling Envelope Dimensions (mm)

	Side A - C	Side B - D
Width	56	36
Height	59	59

Gland Entry Matrix *

Size	Side A - C	Side B - D
M16	1	1
M20	1	0
M25	1	0
M32	0	0
M40	0	0

* Using standard gland clearances

Specifications

Part Number	Material	Width (mm)	Length (mm)	Depth (mm)	Weight (g)
ZP4	Polycarbonate (RAL7035)	82	80	85	175
ZP4 ABS	ABS (RAL7035)	82	80	85	156

Technical Drawing

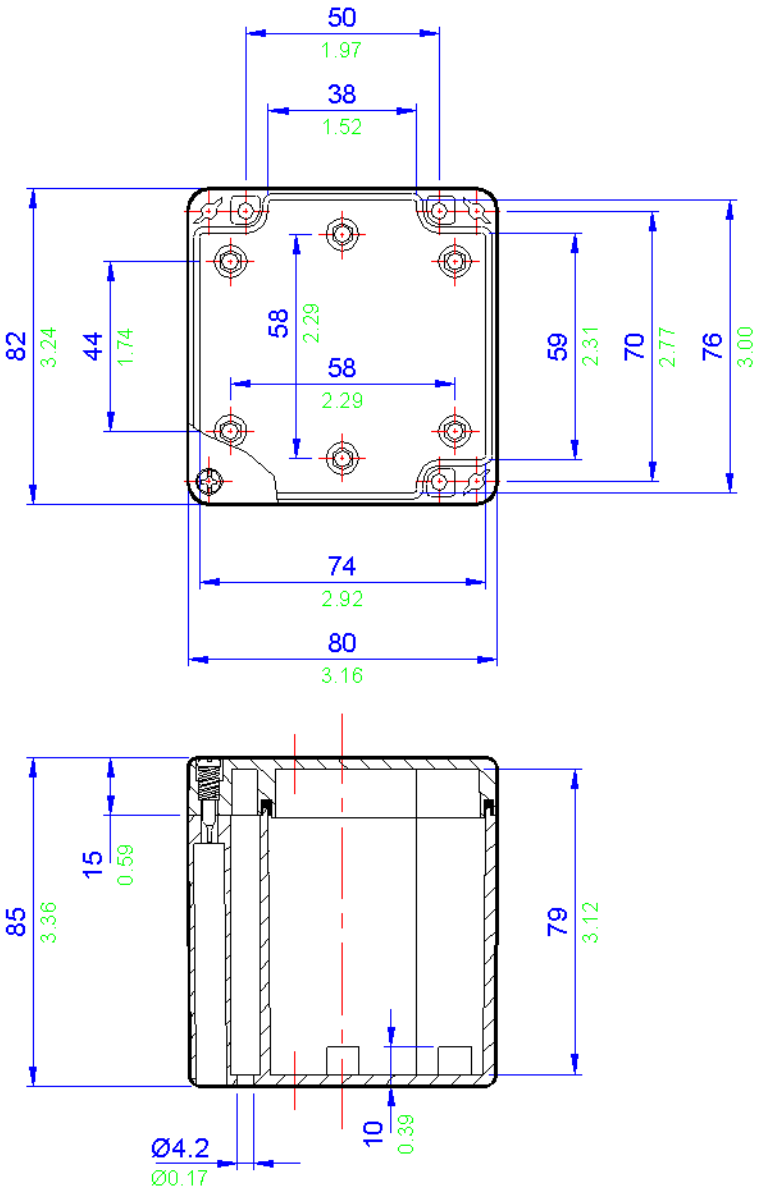

All **blue** dimensions in mm, all **green** dimensions in decimal inches (drawing not to scale)

ZP5 / ZP5 ABS

ABS and Polycarbonate Enclosures

IP65

Application
Industrial areas

Protection Degree
IP65

Certification
NEMA Types 1, 4X, 12
UL

Material
Moulded Polycarbonate - grey (RAL7035) or
Moulded ABS – grey (RAL7035)

Temperature Rating
Polycarbonate versions:
-40˚ to 120˚ C (-94˚ to 248˚ F)
ABS versions:
-40˚ to 65˚ C (-94˚ to 149˚ F)

Power Rating
Not Applicable

Terminal Populations (Maximum Number of Rails = 1)

Calculations do not include the use of end stops, end plates and separators. Check that the enclosure can accommodate the cable bending radius and that the earth stud and entry location will permit the required number of terminals to be fitted

Weidmuller	
BK4 (4 way)	2
BK6 (6 way)	2
BK12 (12 way)	1
MK 6/4	2
MK 6/6	1
SAK 2.5	0
SAK 4	0
SAK 6N	0
SAK 10	0
SAK 16	0
SAK 35	0

Entrelec	
MA2.5/5	0
M4/6	0
M6/8	0
M10/10	0
M16/12	0
M35/16	0

Phoenix	
G5\4 (4 way)	2
G5\6 (6 way)	2
G5\12 (12 way)	1
UK3 N	0
UK5 N	0
UK10 N	0
UK16 N	0
UK35 N	0

Drilling Envelope Dimensions (mm)

	Side A - C	Side B - D
Width	94	36
Height	29	29

Gland Entry Matrix *

Size	Side A - C	Side B - D
M16	0	0
M20	0	0
M25	0	0
M32	0	0
M40	0	0

* Using standard gland clearances

Specifications

Part Number	Material	Width (mm)	Length (mm)	Depth (mm)	Weight (g)
ZP5	Polycarbonate (RAL7035)	120	80	55	175
ZP5 ABS	ABS (RAL7035)	120	80	55	165

Technical Drawing

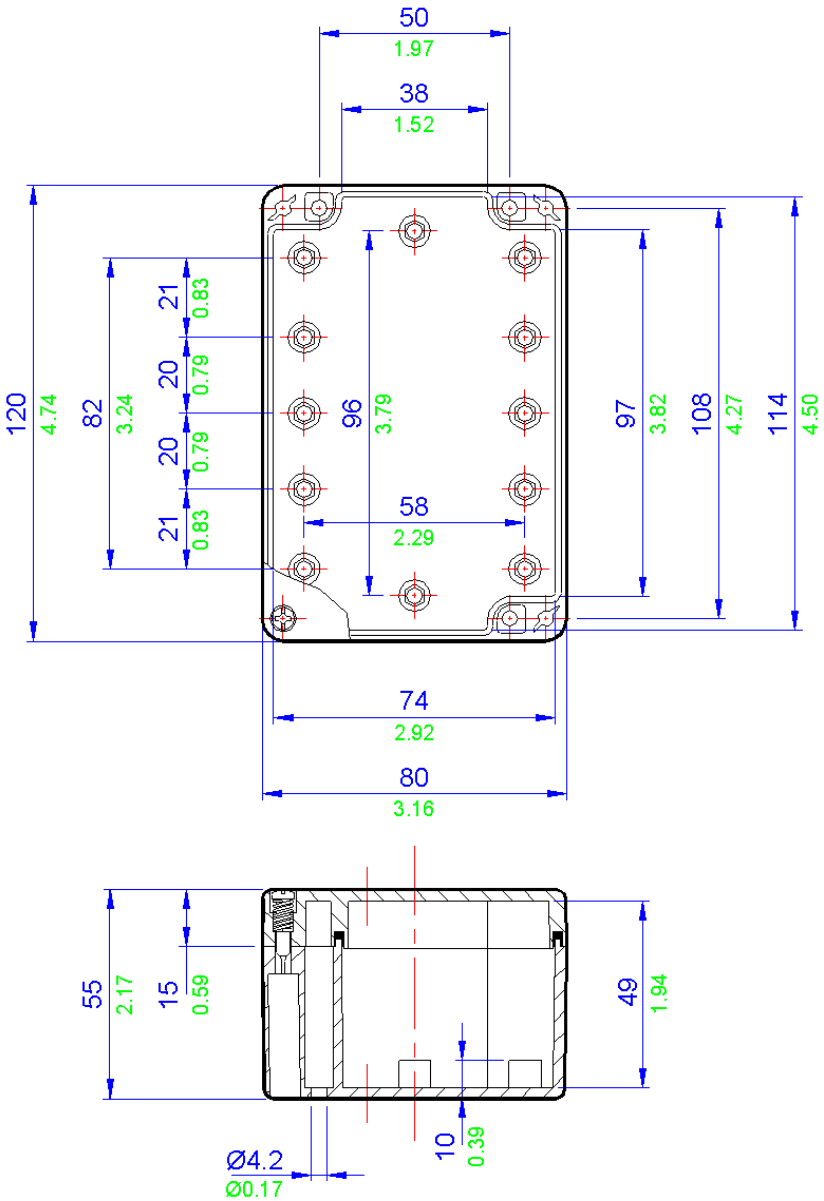

All **blue** dimensions in mm, all **green** dimensions in decimal inches (drawing not to scale)

ZP6 / ZP6 ABS

ABS and Polycarbonate Enclosures

IP65

Application
Industrial areas

Protection Degree
IP65

Certification
NEMA Types 1, 4X, 12
UL

Material
Moulded Polycarbonate - grey (RAL7035) or
Moulded ABS – grey (RAL7035)

Temperature Rating
Polycarbonate versions:
-40˚ to 120˚ C (-94˚ to 248˚ F)
ABS versions:
-40˚ to 65˚ C (-94˚ to 149˚ F)

Power Rating
Not Applicable

Terminal Populations (Maximum Number of Rails = 1)

Calculations do not include the use of end stops, end plates and separators. Check that the enclosure can accommodate the cable bending radius and that the earth stud and entry location will permit the required number of terminals to be fitted

Weidmuller	
BK4 (4 way)	2
BK6 (6 way)	2
BK12 (12 way)	1
MK 6/4	1
MK 6/6	1
SAK 2.5	14
SAK 4	13
SAK 6N	10
SAK 10	8
SAK 16	7
SAK 35	5

Entrelec	
MA2.5/5	17
M4/6	14
M6/8	8
M10/10	8
M16/12	7
M35/16	5

Phoenix	
G5\4 (4 way)	2
G5\6 (6 way)	2
G5\12 (12 way)	1
UK3 N	16
UK5 N	13
UK10 N	8
UK16 N	6
UK35 N	5

Drilling Envelope Dimensions (mm)

	Side A - C	Side B - D
Width	94	36
Height	59	59

Gland Entry Matrix *

Size	Side A - C	Side B - D
M16	4	1
M20	2	0
M25	2	0
M32	1	0
M40	0	0

* Using standard gland clearances

Specifications

Part Number	Material	Width (mm)	Length (mm)	Depth (mm)	Weight (g)
ZP6	Polycarbonate (RAL7035)	120	80	85	225
ZP6 ABS	ABS (RAL7035)	120	80	85	205

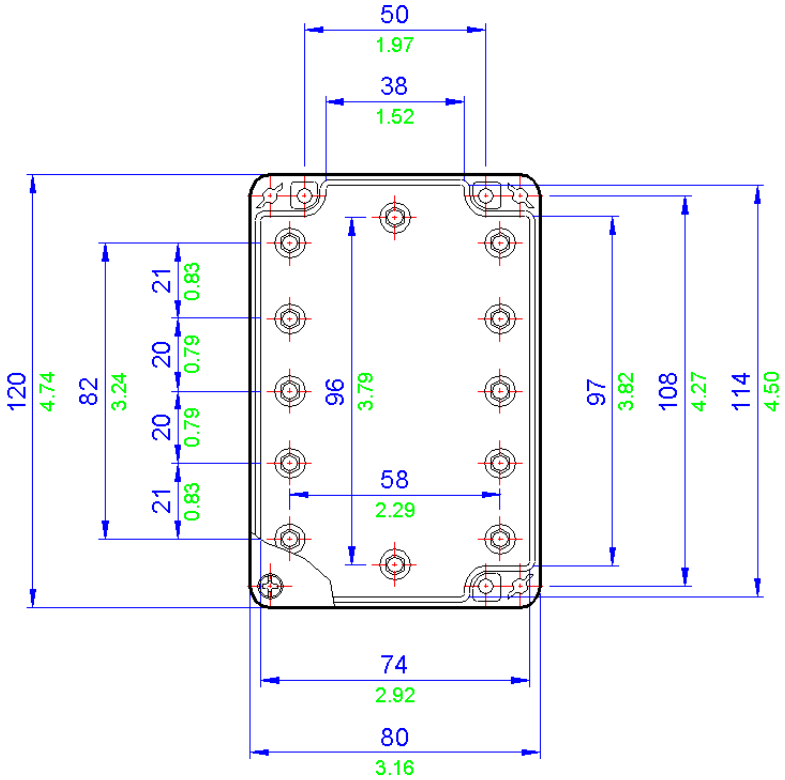

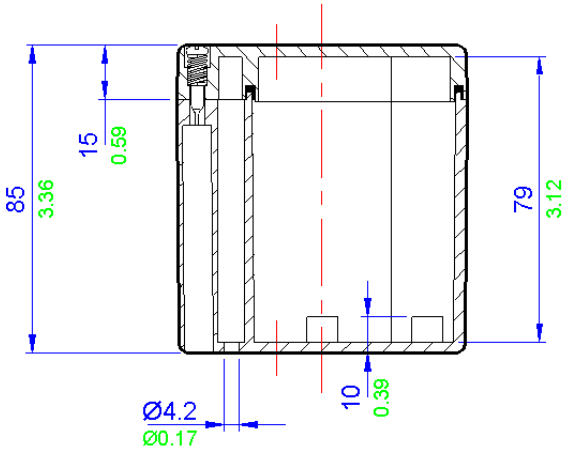

All **blue** dimensions in mm, all **green** dimensions in decimal inches (drawing not to scale)

ZP7 / ZP7 ABS

ABS and Polycarbonate Enclosures

IP65

Application
Industrial areas

Protection Degree
IP65

Certification
NEMA Types 1, 4X, 12
UL

Material
Moulded Polycarbonate - grey (RAL7035) or
Moulded ABS – grey (RAL7035)

Temperature Rating
Polycarbonate versions:
-40˚ to 120˚ C (-94˚ to 248˚ F)
ABS versions:
-40˚ to 65˚ C (-94˚ to 149˚ F)

Power Rating
Not Applicable

Terminal Populations (Maximum Number of Rails = 1)

Calculations do not include the use of end stops, end plates and separators. Check that the enclosure can accommodate the cable bending radius and that the earth stud and entry location will permit the required number of terminals to be fitted

Weidmuller	
BK4 (4 way)	3
BK6 (6 way)	2
BK12 (12 way)	1
MK 6/4	2
MK 6/6	1
SAK 2.5	0
SAK 4	0
SAK 6N	0
SAK 10	0
SAK 16	0
SAK 35	0

Entrelec	
MA2.5/5	0
M4/6	0
M6/8	0
M10/10	0
M16/12	0
M35/16	0

Phoenix	
G5\4 (4 way)	3
G5\6 (6 way)	2
G5\12 (12 way)	1
UK3 N	0
UK5 N	0
UK10 N	0
UK16 N	0
UK35 N	0

Drilling Envelope Dimensions (mm)

	Side A - C	Side B - D
Width	134	36
Height	29	29

Gland Entry Matrix *

Size	Side A - C	Side B - D
M16	0	0
M20	0	0
M25	0	0
M32	0	0
M40	0	0

* Using standard gland clearances

Specifications

Part Number	Material	Width (mm)	Length (mm)	Depth (mm)	Weight (g)
ZP7	Polycarbonate (RAL7035)	160	80	55	225
ZP7 ABS	ABS (RAL7035)	160	80	55	205

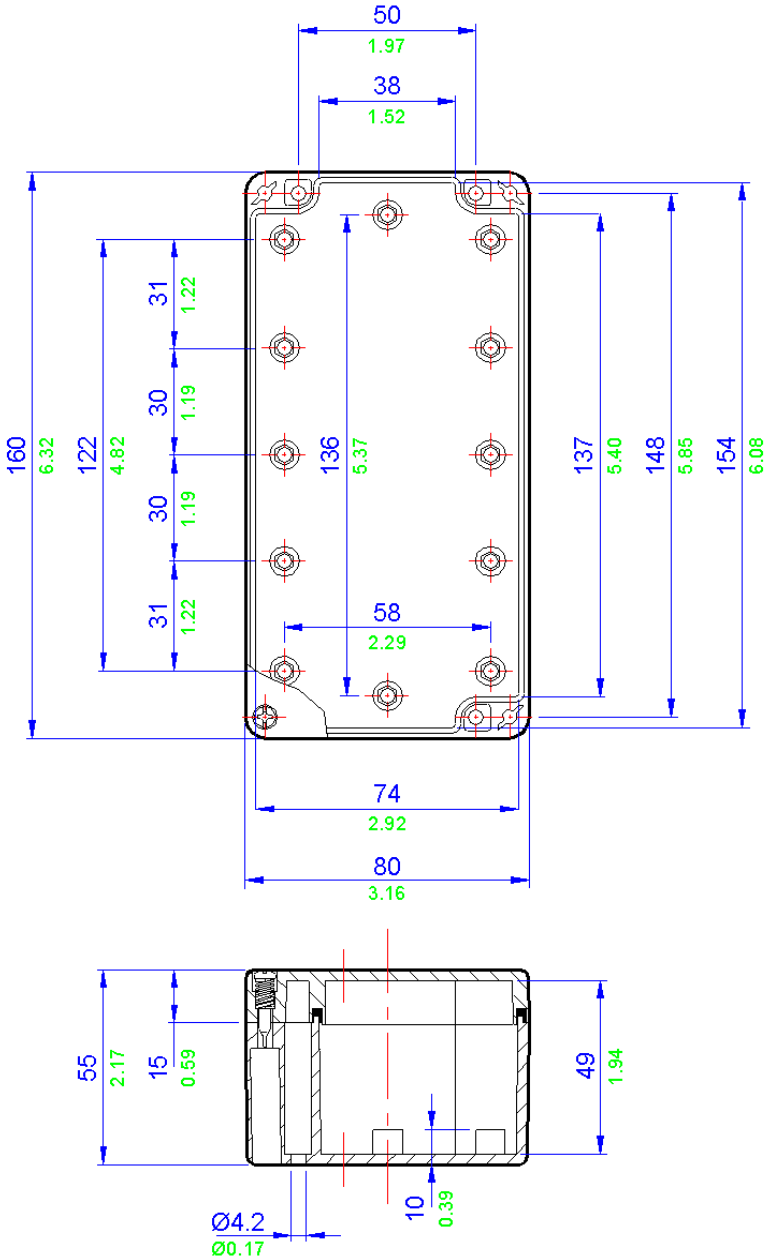

All **blue** dimensions in mm, all **green** dimensions in decimal inches (drawing not to scale)

ZP8 / ZP8 ABS

ABS and Polycarbonate Enclosures

IP65

Application
Industrial areas

Protection Degree
IP65

Certification
NEMA Types 1, 4X, 12
UL

Material
Moulded Polycarbonate - grey (RAL7035) or
Moulded ABS – grey (RAL7035)

Temperature Rating
Polycarbonate versions:
-40˚ to 120˚ C (-94˚ to 248˚ F)
ABS versions:
-40˚ to 65˚ C (-94˚ to 149˚ F)

Power Rating
Not Applicable

Terminal Populations (Maximum Number of Rails = 1)

Calculations do not include the use of end stops, end plates and separators. Check that the enclosure can accommodate the cable bending radius and that the earth stud and entry location will permit the required number of terminals to be fitted

Weidmuller		Entrelec		Phoenix	
BK4 (4 way)	3	MA2.5/5	24	G5\4 (4 way)	3
BK6 (6 way)	2	M4/6	20	G5\6 (6 way)	2
BK12 (12 way)	1	M6/8	15	G5\12 (12 way)	1
MK 6/4	2	M10/10	12	UK3 N	23
MK 6/6	1	M16/12	10	UK5 N	19
SAK 2.5	20	M35/16	7	UK10 N	11
SAK 4	19			UK16 N	9
SAK 6N	15			UK35 N	7
SAK 10	12				
SAK 16	10				
SAK 35	7				

Drilling Envelope Dimensions (mm)

	Side A - C	Side B - D
Width	59	59
Height	134	36

Gland Entry Matrix *

Size	Side A - C	Side B - D
M16	6	1
M20	3	0
M25	2	0
M32	2	0
M40	0	0

* Using standard gland clearances

Specifications

Part Number	Material	Width (mm)	Length (mm)	Depth (mm)	Weight (g)
ZP8	Polycarbonate (RAL7035)	160	80	85	250
ZP8 ABS	ABS (RAL7035)	160	80	85	235

Technical Drawing

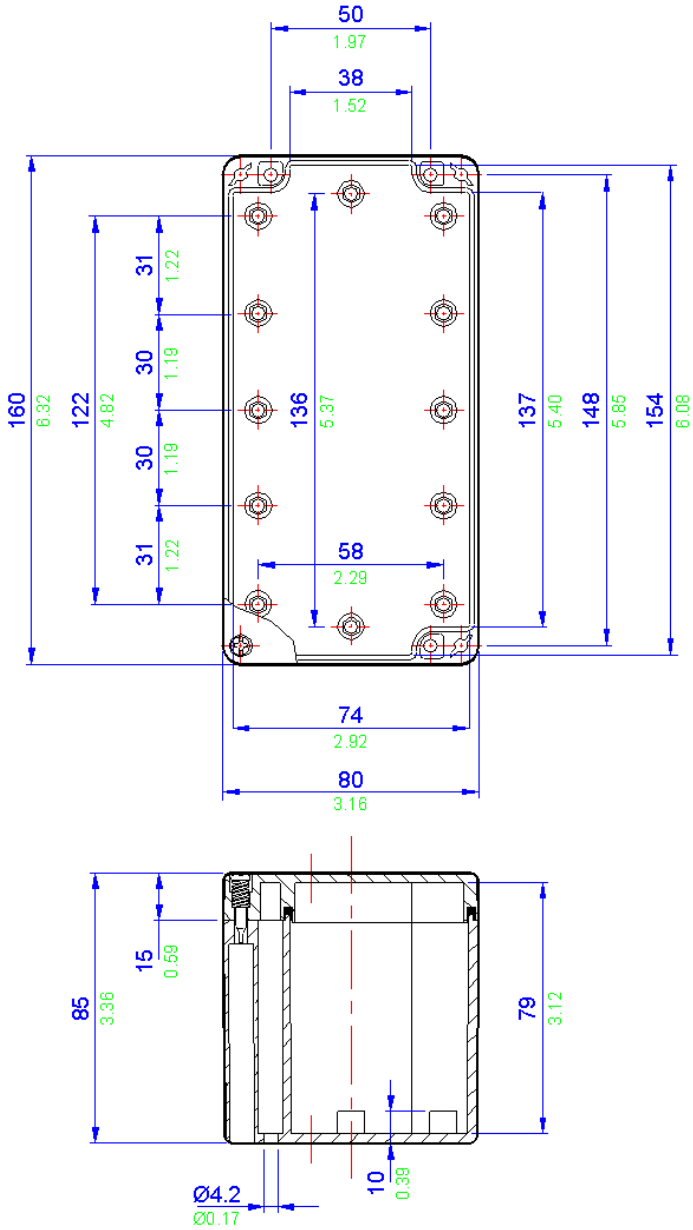

All **blue** dimensions in mm, all **green** dimensions in decimal inches (drawing not to scale)

ZP9 / ZP9 ABS

ABS and Polycarbonate Enclosures

IP65

Application
Industrial areas

Protection Degree
IP65

Certification
NEMA Types 1, 4X, 12
UL

Material
Moulded Polycarbonate - grey (RAL7035) or
Moulded ABS – grey (RAL7035)

Temperature Rating
Polycarbonate versions:
-40˚ to 120˚ C (-94˚ to 248˚ F)
ABS versions:
-40˚ to 65˚ C (-94˚ to 149˚ F)

Power Rating
Not Applicable

Terminal Populations (Maximum Number of Rails = 1)

Calculations do not include the use of end stops, end plates and separators. Check that the enclosure can accommodate the cable bending radius and that the earth stud and entry location will permit the required number of terminals to be fitted

Weidmuller	
BK4 (4 way)	2
BK6 (6 way)	2
BK12 (12 way)	1
MK 6/4	2
MK 6/6	1
SAK 2.5	0
SAK 4	0
SAK 6N	0
SAK 10	0
SAK 16	0
SAK 35	0

Entrelec	
MA2.5/5	0
M4/6	0
M6/8	0
M10/10	0
M16/12	0
M35/16	0

Phoenix	
G5\4 (4 way)	2
G5\6 (6 way)	2
G5\12 (12 way)	1
UK3 N	0
UK5 N	0
UK10 N	0
UK16 N	0
UK35 N	0

Drilling Envelope Dimensions (mm)

	Side A - C	Side B - D
Width	96	76
Height	29	29

Gland Entry Matrix *

Size	Side A - C	Side B - D
M16	0	0
M20	0	0
M25	0	0
M32	0	0
M40	0	0

* Using standard gland clearances

Specifications

Part Number	Material	Width (mm)	Length (mm)	Depth (mm)	Weight (g)
ZP9	Polycarbonate (RAL7035)	122	120	55	240
ZP9 ABS	ABS (RAL7035)	122	120	55	220

Technical Drawing

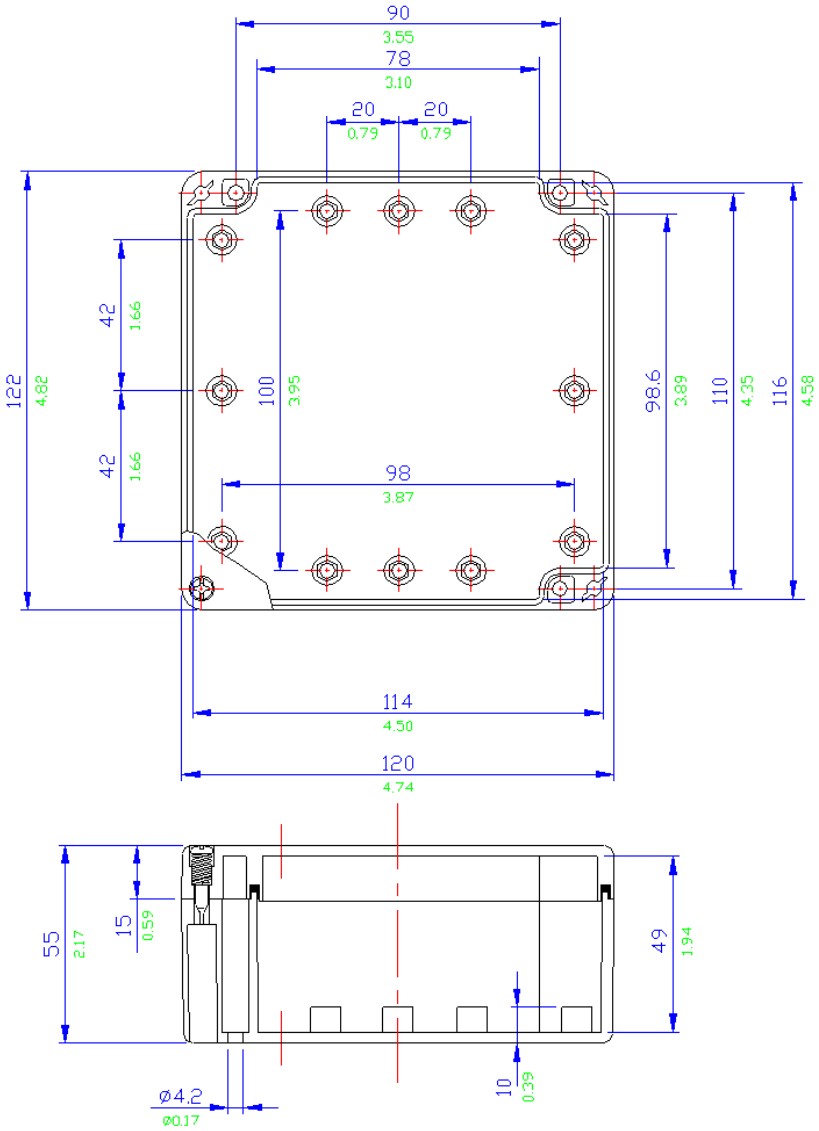

All **blue** dimensions in mm, all **green** dimensions in decimal inches (drawing not to scale)

ZP10 / ZP10 ABS ABS and Polycarbonate Enclosures IP65

Application
Industrial areas

Protection Degree
IP65

Certification
NEMA Types 1, 4X, 12
UL

Material
Moulded Polycarbonate - grey (RAL7035) or
Moulded ABS – grey (RAL7035)

Temperature Rating
Polycarbonate versions:
-40˚ to 120˚ C (-94˚ to 248˚ F)
ABS versions:
-40˚ to 65˚ C (-94˚ to 149˚ F)

Power Rating
Not Applicable

Terminal Populations (Maximum Number of Rails = 1)

Calculations do not include the use of end stops, end plates and separators. Check that the enclosure can accommodate the cable bending radius and that the earth stud and entry location will permit the required number of terminals to be fitted

Weidmuller	
BK4 (4 way)	2
BK6 (6 way)	2
BK12 (12 way)	1
MK 6/4	2
MK 6/6	1
SAK 2.5	14
SAK 4	13
SAK 6N	10
SAK 10	8
SAK 16	7
SAK 35	5

Entrelec	
MA2.5/5	17
M4/6	14
M6/8	8
M10/10	8
M16/12	7
M35/16	5

Phoenix	
G5\4 (4 way)	2
G5\6 (6 way)	2
G5\12 (12 way)	1
UK3 N	16
UK5 N	13
UK10 N	8
UK16 N	6
UK35 N	5

Drilling Envelope Dimensions (mm)

	Side A - C	Side B - D
Width	96	76
Height	59	59

Gland Entry Matrix *

Size	Side A - C	Side B - D
M16	4	2
M20	2	1
M25	2	1
M32	1	1
M40	0	0

* Using standard gland clearances

Specifications

Part Number	Material	Width (mm)	Length (mm)	Depth (mm)	Weight (g)
ZP10	Polycarbonate (RAL7035)	122	120	85	295
ZP10 ABS	ABS (RAL7035)	122	120	85	270

Technical Drawing

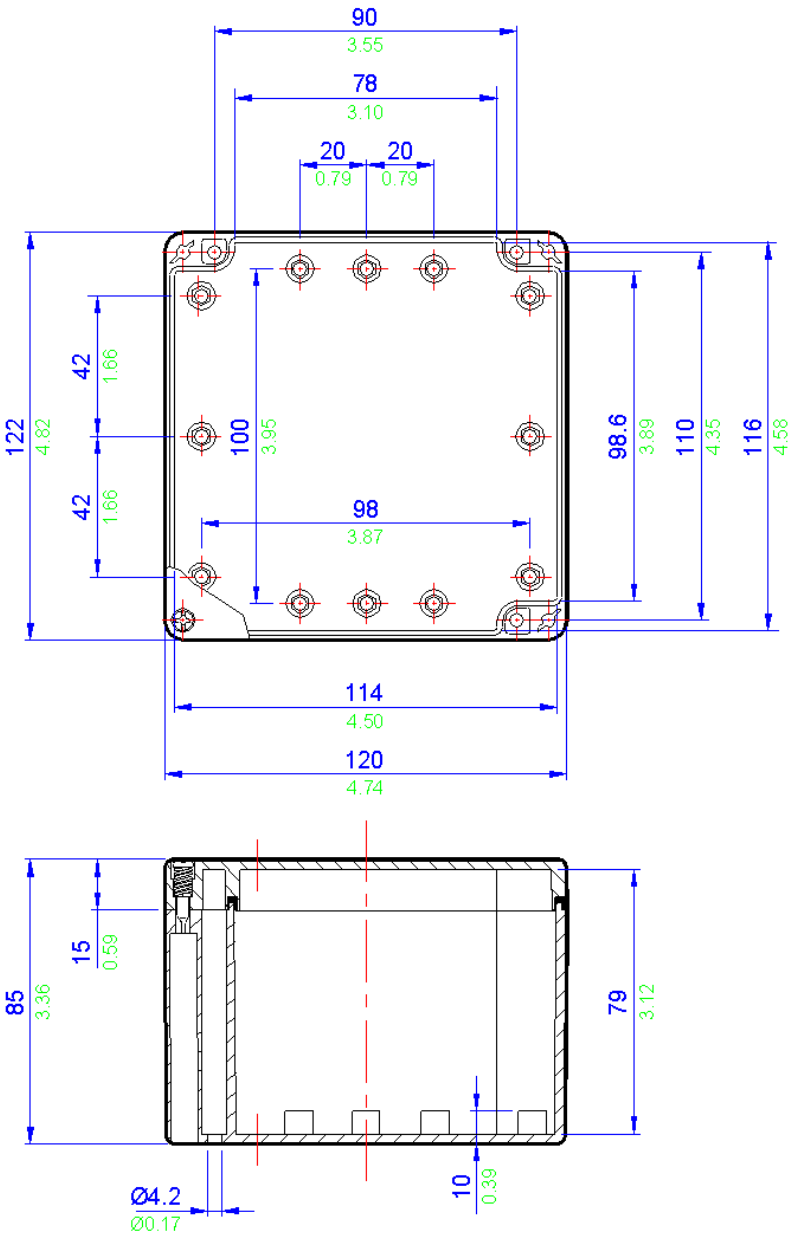

All **blue** dimensions in mm, all **green** dimensions in decimal inches (drawing not to scale)

ZP11 / ZP11 ABS ABS and Polycarbonate Enclosures IP65

Application
Industrial areas

Protection Degree
IP65

Certification
NEMA Types 1, 4X, 12
UL

Material
Moulded Polycarbonate - grey (RAL7035) or
Moulded ABS – grey (RAL7035)

Temperature Rating
Polycarbonate versions:
-40˚ to 120˚ C (-94˚ to 248˚ F)
ABS versions:
-40˚ to 65˚ C (-94˚ to 149˚ F)

Power Rating
Not Applicable

Terminal Populations (Maximum Number of Rails = 2)

Calculations do not include the use of end stops, end plates and separators. Check that the enclosure can accommodate the cable bending radius and that the earth stud and entry location will permit the required number of terminals to be fitted

Weidmuller	
BK4 (4 way)	5
BK6 (6 way)	3
BK12 (12 way)	2
MK 6/4	3
MK 6/6	2
SAK 2.5	28
SAK 4	28
SAK 6N	21
SAK 10	16
SAK 16	14
SAK 35	7

Entrelec	
MA2.5/5	33
M4/6	28
M6/8	21
M10/10	16
M16/12	14
M35/16	10

G5\4 (4 way)	5
G5\6 (6 way)	3
G5\12 (12 way)	2
UK3 N	32
UK5 N	27
UK10 N	16
UK16 N	13
UK35 N	11

Drilling Envelope Dimensions (mm)

	Side A - C	Side B - D
Width	174	76
Height	48	48

Gland Entry Matrix *

Size	Side A - C	Side B - D
M16	5	2
M20	4	1
M25	3	1
M32	0	0
M40	0	0

* Using standard gland clearances

Specifications

Part Number	Material	Width (mm)	Length (mm)	Depth (mm)	Weight (g)
ZP11	Polycarbonate (RAL7035)	200	120	75	400
ZP11 ABS	ABS (RAL7035)	200	120	75	380

Technical Drawing

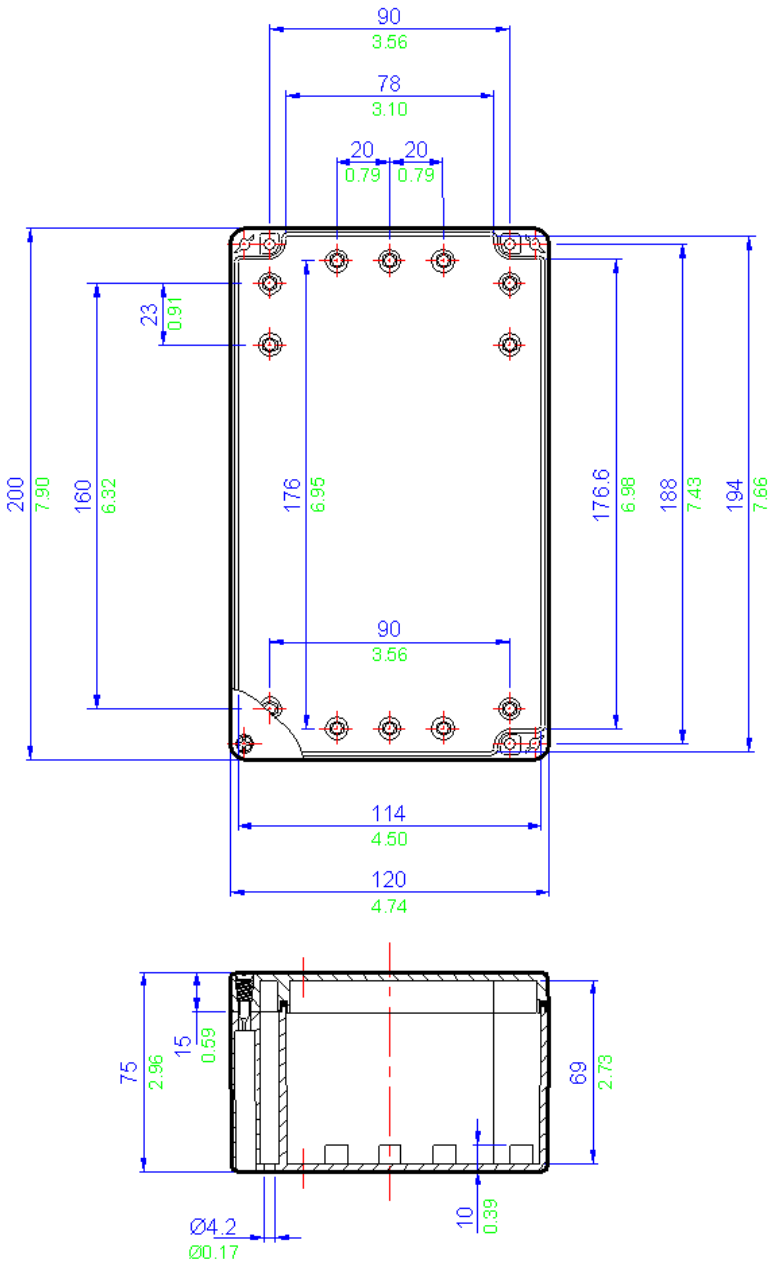

All **blue** dimensions in mm, all **green** dimensions in decimal inches (drawing not to scale)

ZP12 / ZP12 ABS ABS and Polycarbonate Enclosures IP65

Application
Industrial areas

Protection Degree
IP65

Certification
NEMA Types 1, 4X, 12
UL

Material
Moulded Polycarbonate - grey (RAL7035) or
Moulded ABS – grey (RAL7035)

Temperature Rating
Polycarbonate versions:
-40˚ to 120˚ C (-94˚ to 248˚ F)
ABS versions:
-40˚ to 65˚ C (-94˚ to 149˚ F)

Power Rating
Not Applicable

Terminal Populations (Maximum Number of Rails = 1)

Calculations do not include the use of end stops, end plates and separators. Check that the enclosure can accommodate the cable bending radius and that the earth stud and entry location will permit the required number of terminals to be fitted

Weidmuller	
BK4 (4 way)	5
BK6 (6 way)	3
BK12 (12 way)	2
MK 6/4	3
MK 6/6	2
SAK 2.5	28
SAK 4	28
SAK 6N	21
SAK 10	16
SAK 16	14
SAK 35	7

Entrelec	
MA2.5/5	33
M4/6	28
M6/8	21
M10/10	16
M16/12	14
M35/16	10

Phoenix	
G5\4 (4 way)	5
G5\6 (6 way)	3
G5\12 (12 way)	2
UK3 N	32
UK5 N	27
UK10 N	16
UK16 N	13
UK35 N	11

Drilling Envelope Dimensions (mm)

	Side A - C	Side B - D
Width	174	106
Height	49	49

Gland Entry Matrix *

Size	Side A - C	Side B - D
M16	5	3
M20	4	2
M25	3	2
M32	0	0
M40	0	0

* Using standard gland clearances

Specifications

Part Number	Material	Width (mm)	Length (mm)	Depth (mm)	Weight (g)
ZP12	Polycarbonate (RAL7035)	200	150	75	475
ZP12 ABS	ABS (RAL7035)	200	150	75	440

Technical Drawing

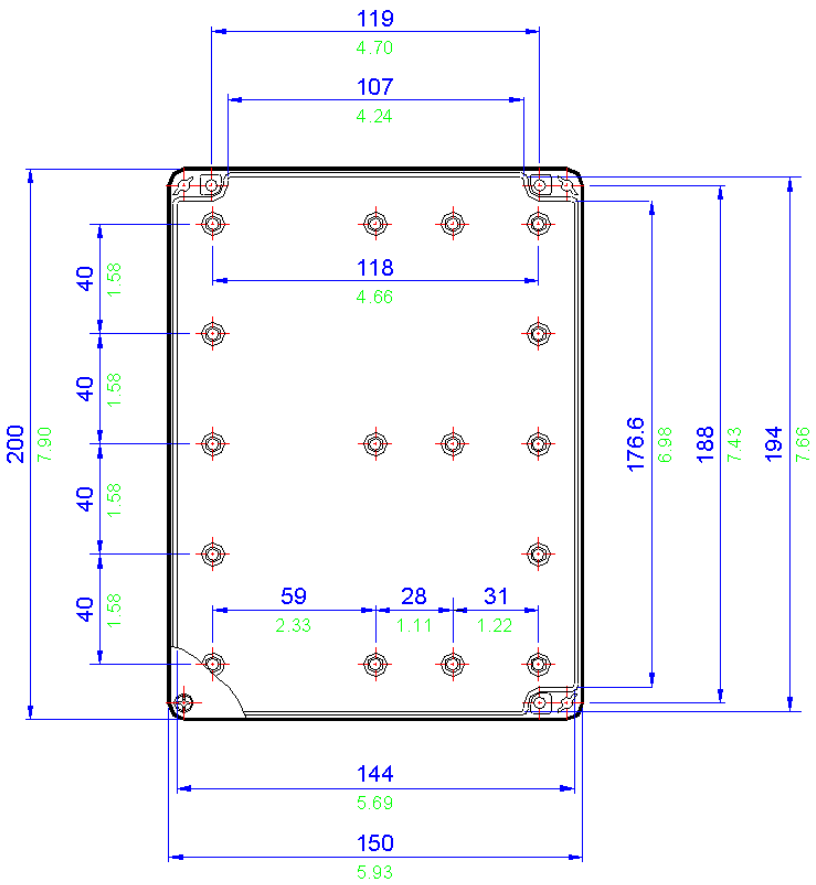

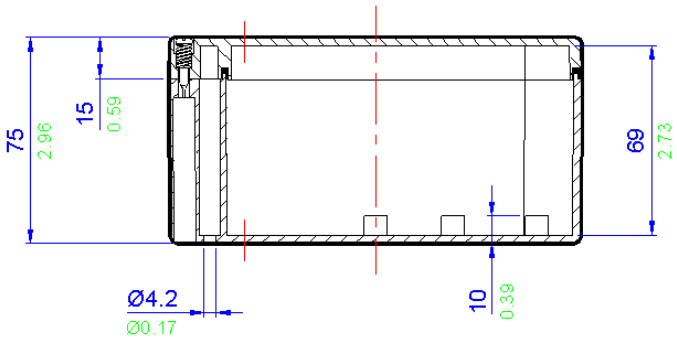

All **blue** dimensions in mm, all **green** dimensions in decimal inches (drawing not to scale)

ZP13 / ZP13 ABS ABS and Polycarbonate Enclosures IP65

Application
Industrial areas

Protection Degree
IP65

Certification
NEMA Types 1, 4X, 12
UL

Material
Moulded Polycarbonate - grey (RAL7035) or
Moulded ABS – grey (RAL7035)

Temperature Rating
Polycarbonate versions:
-40˚ to 120˚ C (-94˚ to 248˚ F)
ABS versions:
-40˚ to 65˚ C (-94˚ to 149˚ F)

Power Rating
Not Applicable

Terminal Populations (Maximum Number of Rails = 1)

Calculations do not include the use of end stops, end plates and separators. Check that the enclosure can accommodate the cable bending radius and that the earth stud and entry location will permit the required number of terminals to be fitted

Weidmuller	
BK4 (4 way)	6
BK6 (6 way)	4
BK12 (12 way)	2
MK 6/4	4
MK 6/6	3
SAK 2.5	34
SAK 4	34
SAK 6N	25
SAK 10	20
SAK 16	17
SAK 35	11

Entrelec	
MA2.5/5	41
M4/6	34
M6/8	25
M10/10	20
M16/12	17
M35/16	12

Phoenix	
G5\4 (4 way)	6
G5\6 (6 way)	4
G5\12 (12 way)	2
UK3 N	39
UK5 N	33
UK10 N	20
UK16 N	16
UK35 N	13

Drilling Envelope Dimensions (mm)

	Side A - C	Side B - D
Width	214	76
Height	64	64

Gland Entry Matrix *

Size	Side A - C	Side B - D
M16	12	4
M20	6	1
M25	4	1
M32	3	1
M40	0	0

* Using standard gland clearances

Specifications

Part Number	Material	Width (mm)	Length (mm)	Depth (mm)	Weight (g)
ZP13	Polycarbonate (RAL7035)	240	120	100	550
ZP13 ABS	ABS (RAL7035)	240	120	100	495

Technical Drawing

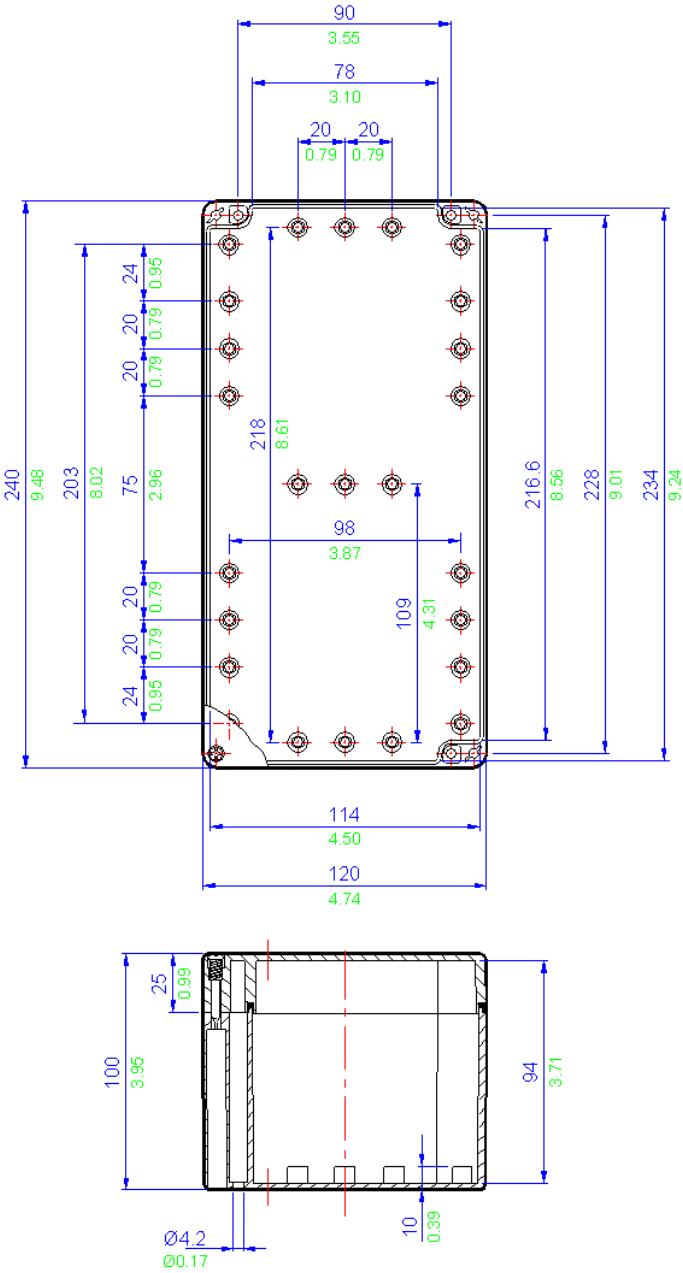

All **blue** dimensions in mm, all **green** dimensions in decimal inches (drawing not to scale)

ZP14 / ZP14 ABS ABS and Polycarbonate Enclosures IP65

Application
Industrial areas

Protection Degree
IP65

Certification
NEMA Types 1, 4X, 12
UL

Material
Moulded Polycarbonate - grey (RAL7035) or
Moulded ABS – grey (RAL7035)

Temperature Rating
Polycarbonate versions:
-40˚ to 120˚ C (-94˚ to 248˚ F)
ABS versions:
-40˚ to 65˚ C (-94˚ to 149˚ F)

Power Rating
Not Applicable

Terminal Populations (Maximum Number of Rails = 1)

Calculations do not include the use of end stops, end plates and separators. Check that the enclosure can accommodate the cable bending radius and that the earth stud and entry location will permit the required number of terminals to be fitted

Weidmuller	
BK4 (4 way)	6
BK6 (6 way)	4
BK12 (12 way)	2
MK 6/4	4
MK 6/6	3
SAK 2.5	34
SAK 4	34
SAK 6N	25
SAK 10	20
SAK 16	17
SAK 35	11

Entrelec	
MA2.5/5	41
M4/6	34
M6/8	25
M10/10	20
M16/12	17
M35/16	12

Phoenix	
G5\4 (4 way)	6
G5\6 (6 way)	4
G5\12 (12 way)	2
UK3 N	39
UK5 N	33
UK10 N	20
UK16 N	16
UK35 N	13

Drilling Envelope Dimensions (mm)

	Side A - C	Side B - D
Width	100	106
Height	64 (x2)	64

Gland Entry Matrix *

Size	Side A - C	Side B - D
M16	12	6
M20	4	2
M25	4	2
M32	2	2
M40	0	0

* Using standard gland clearances

Specifications

Part Number	Material	Width (mm)	Length (mm)	Depth (mm)	Weight (g)
ZP14	Polycarbonate (RAL7035)	240	160	90	645
ZP14 ABS	ABS (RAL7035)	240	160	90	575

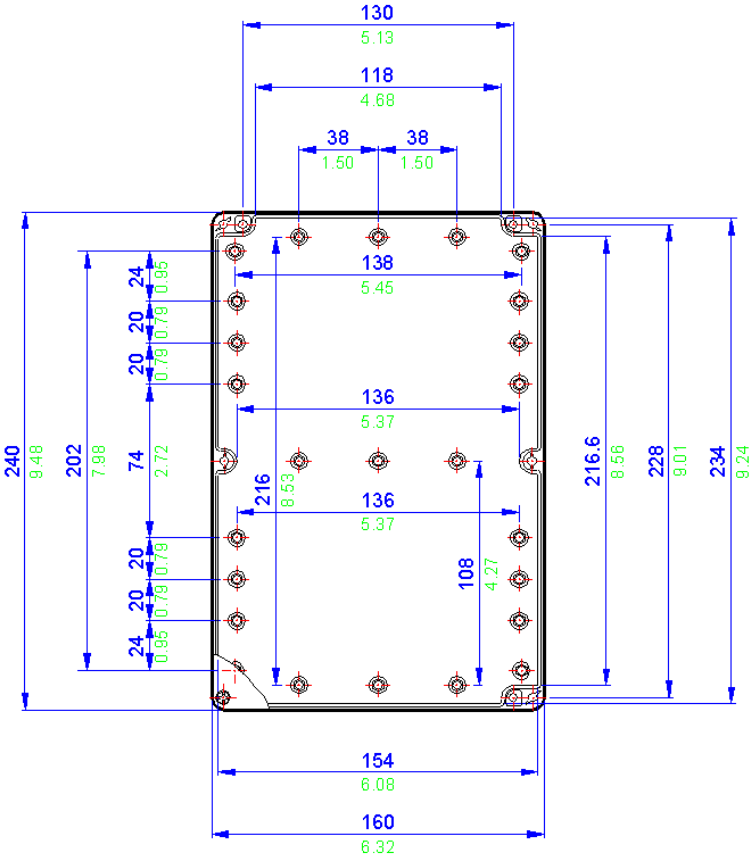

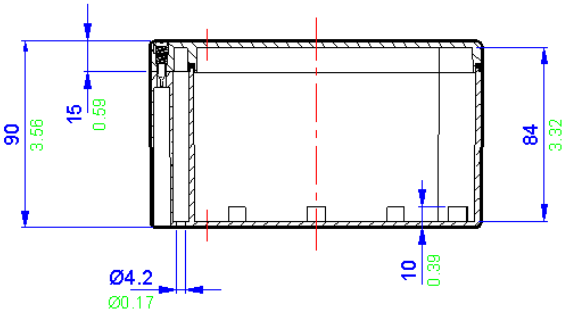

All **blue** dimensions in mm, all **green** dimensions in decimal inches (drawing not to scale)

ZP15 / ZP15 ABS ABS and Polycarbonate Enclosures IP65

Application
Industrial areas

Protection Degree
IP65

Certification
NEMA Types 1, 4X, 12
UL

Material
Moulded Polycarbonate - grey (RAL7035) or
Moulded ABS – grey (RAL7035)

Temperature Rating
Polycarbonate versions:
-40˚ to 120˚ C (-94˚ to 248˚ F)
ABS versions:
-40˚ to 65˚ C (-94˚ to 149˚ F)

Power Rating
Not Applicable

Terminal Populations (Maximum Number of Rails = 1)

Calculations do not include the use of end stops, end plates and separators. Check that the enclosure can accommodate the cable bending radius and that the earth stud and entry location will permit the required number of terminals to be fitted

Weidmuller	
BK4 (4 way)	6
BK6 (6 way)	4
BK12 (12 way)	2
MK 6/4	4
MK 6/6	3
SAK 2.5	36
SAK 4	36
SAK 6N	27
SAK 10	21
SAK 16	18
SAK 35	12

Entrelec	
MA2.5/5	43
M4/6	36
M6/8	27
M10/10	21
M16/12	18
M35/16	13

Phoenix	
G5\4 (4 way)	6
G5\6 (6 way)	4
G5\12 (12 way)	2
UK3 N	42
UK5 N	42
UK10 N	21
UK16 N	17
UK35 N	14

Drilling Envelope Dimensions (mm)

	Side A - C	Side B - D
Width	104	116
Height	65 (x2)	65

Gland Entry Matrix *

Size	Side A - C	Side B - D
M16	12	6
M20	4	2
M25	4	2
M32	2	2
M40	0	0

* Using standard gland clearances

Specifications

Part Number	Material	Width (mm)	Length (mm)	Depth (mm)	Weight (g)
ZP15	Polycarbonate (RAL7035)	250	160	90	550
ZP15 ABS	ABS (RAL7035)	250	160	90	495

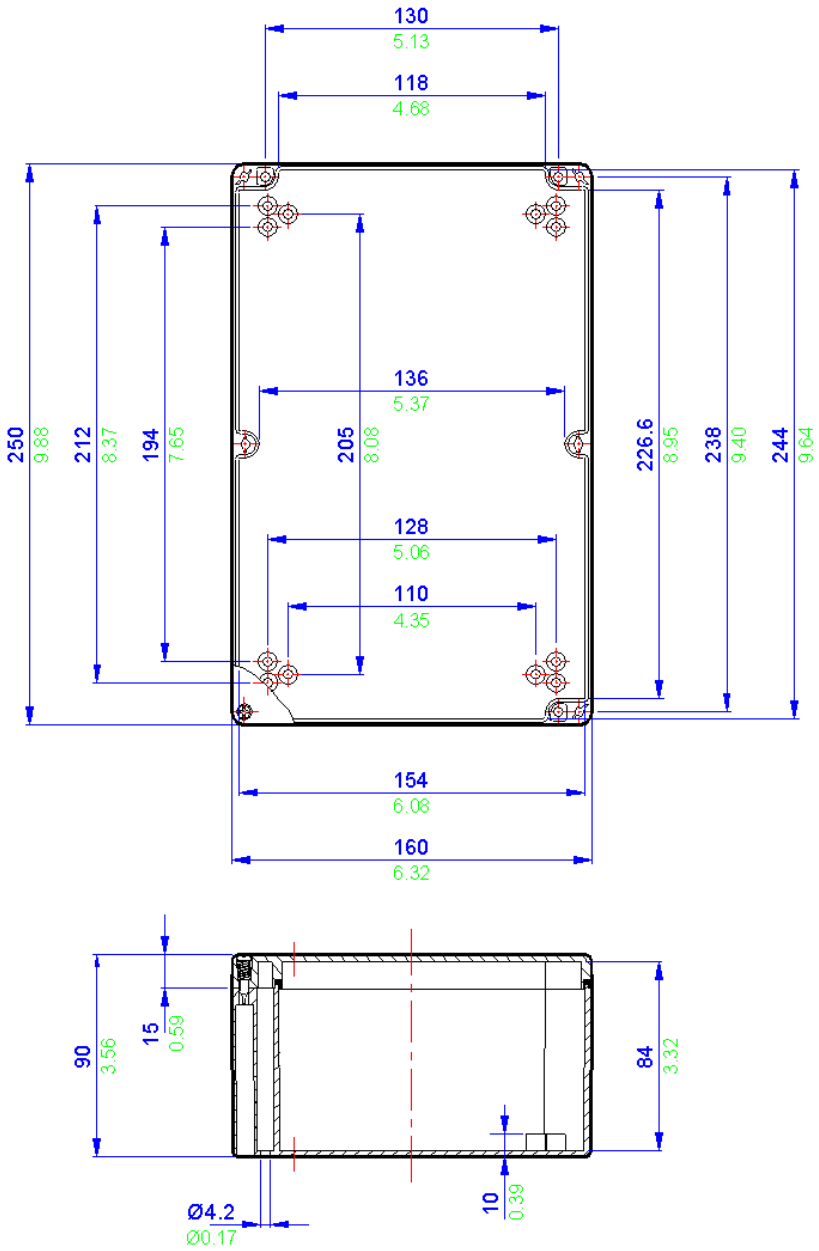

All **blue** dimensions in mm, all **green** dimensions in decimal inches (drawing not to scale)

ZP16 / ZP16 ABS ABS and Polycarbonate Enclosures IP65

Application
Industrial areas

Protection Degree
IP65

Certification
NEMA Types 1, 4X, 12
UL

Material
Moulded Polycarbonate - grey (RAL7035) or
Moulded ABS – grey (RAL7035)

Temperature Rating
Polycarbonate versions:
-40˚ to 120˚ C (-94˚ to 248˚ F)
ABS versions:
-40˚ to 65˚ C (-94˚ to 149˚ F)

Power Rating
Not Applicable

Terminal Populations (Maximum Number of Rails = 2)

Calculations do not include the use of end stops, end plates and separators. Check that the enclosure can accommodate the cable bending radius and that the earth stud and entry location will permit the required number of terminals to be fitted

Weidmuller		Entrelec		Phoenix	
BK4 (4 way)	6	MA2.5/5	41	G5\4 (4 way)	6
BK6 (6 way)	4	M4/6	34	G5\6 (6 way)	4
BK12 (12 way)	2	M6/8	25	G5\12 (12 way)	2
MK 6/4	4	M10/10	20	UK3 N	39
MK 6/6	3	M16/12	17	UK5 N	33
SAK 2.5	34	M35/16	12	UK10 N	20
SAK 4	34			UK16 N	16
SAK 6N	25			UK35 N	13
SAK 10	20				
SAK 16	17				
SAK 35	11				

Drilling Envelope Dimensions (mm)

	Side A - C	Side B - D
Width	100	106
Height	64 (x2)	64

Gland Entry Matrix *

Size	Side A - C	Side B - D
M16	12	6
M20	4	3
M25	4	2
M32	2	2
M40	0	0

* Using standard gland clearances

Specifications

Part Number	Material	Width (mm)	Length (mm)	Depth (mm)	Weight (g)
ZP16	Polycarbonate (RAL7035)	240	160	120	805
ZP16 ABS	ABS (RAL7035)	240	160	120	720

Technical Drawing

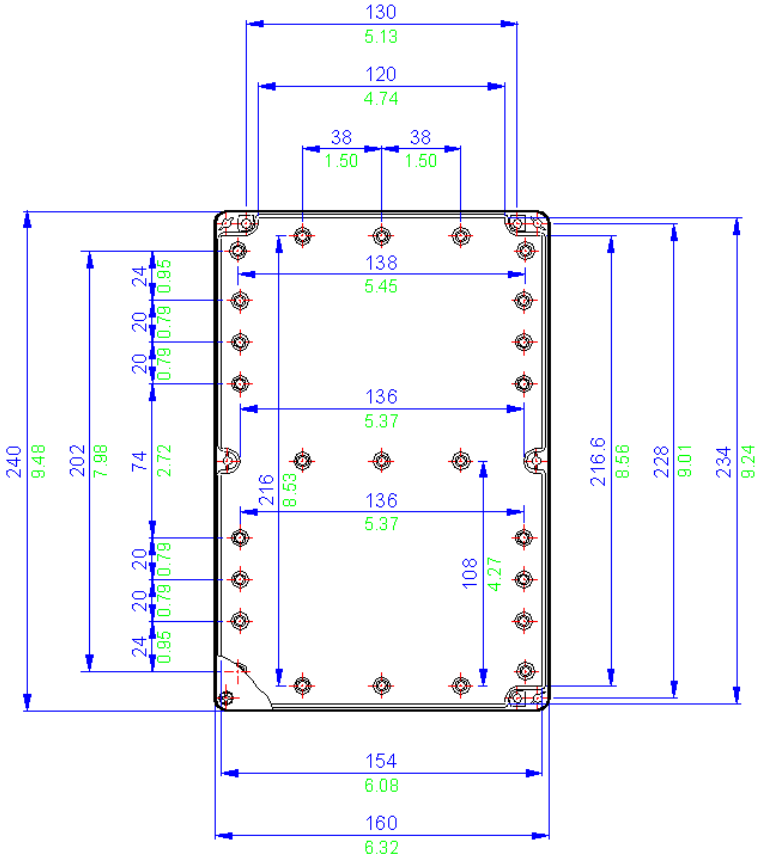

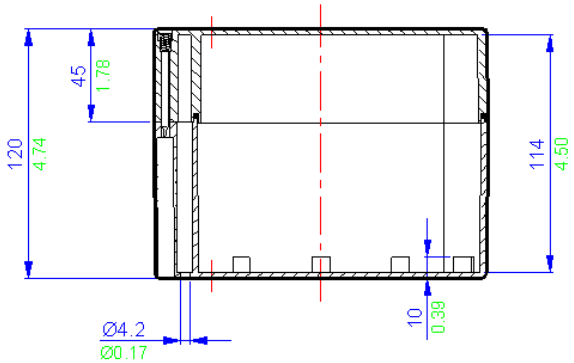

All **blue** dimensions in mm, all **green** dimensions in decimal inches (drawing not to scale)

ZP17 / ZP17 ABS ABS and Polycarbonate Enclosures IP65

Application
Industrial areas

Protection Degree
IP65

Certification
NEMA Types 1, 4X, 12
UL

Material
Moulded Polycarbonate - grey (RAL7035) or
Moulded ABS – grey (RAL7035)

Temperature Rating
Polycarbonate versions:
-40˚ to 120˚ C (-94˚ to 248˚ F)
ABS versions:
-40˚ to 65˚ C (-94˚ to 149˚ F)

Power Rating
Not Applicable

Terminal Populations (Maximum Number of Rails = 1)

Calculations do not include the use of end stops, end plates and separators. Check that the enclosure can accommodate the cable bending radius and that the earth stud and entry location will permit the required number of terminals to be fitted

Weidmuller		Entrelec		Phoenix	
BK4 (4 way)	10	MA2.5/5	68	G5\4 (4 way)	6
BK6 (6 way)	6	M4/6	56	G5\6 (6 way)	4
BK12 (12 way)	4	M6/8	42	G5\12 (12 way)	2
MK 6/4	6	M10/10	34	UK3 N	39
MK 6/6	4	M16/12	28	UK5 N	33
SAK 2.5	56	M35/16	20	UK10 N	20
SAK 4	56			UK16 N	16
SAK 6N	42			UK35 N	13
SAK 10	34				
SAK 16	28				
SAK 35	18				

Drilling Envelope Dimensions (mm)

	Side A - C	Side B - D
Width	130	186
Height	44 (x2)	44

Gland Entry Matrix *

Size	Side A - C	Side B - D
M16	8	5
M20	6	4
M25	0	0
M32	0	0
M40	0	0

* Using standard gland clearances

Specifications

Part Number	Material	Width (mm)	Length (mm)	Depth (mm)	Weight (g)
ZP17	Polycarbonate (RAL7035)	300	230	85	930
ZP17 ABS	ABS (RAL7035)	300	230	85	875

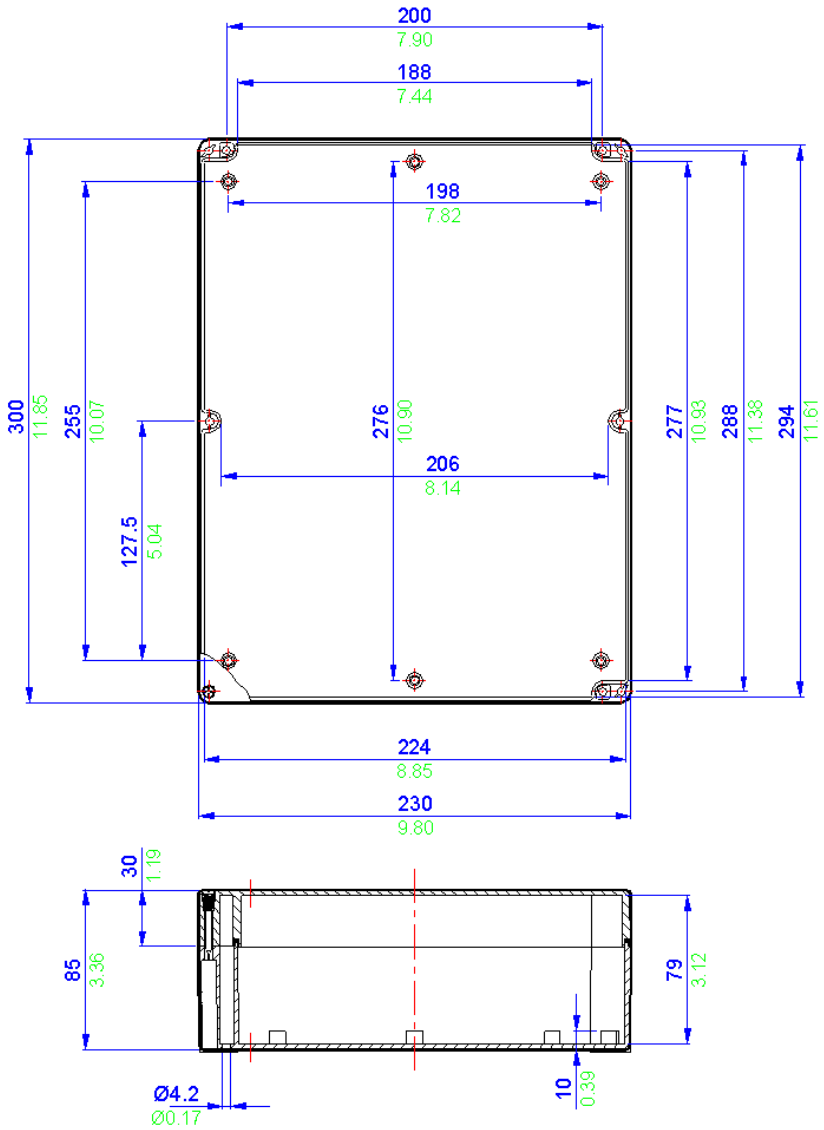

All **blue** dimensions in mm, all **green** dimensions in decimal inches (drawing not to scale)

ZP18 / ZP18 ABS ABS and Polycarbonate Enclosures IP65

Application
Industrial areas

Protection Degree
IP65

Certification
NEMA Types 1, 4X, 12
UL

Material
Moulded Polycarbonate - grey (RAL7035) or
Moulded ABS – grey (RAL7035)

Temperature Rating
Polycarbonate versions:
-40˚ to 120˚ C (-94˚ to 248˚ F)
ABS versions:
-40˚ to 65˚ C (-94˚ to 149˚ F)

Power Rating
Not Applicable

Terminal Populations (Maximum Number of Rails = 1)

Calculations do not include the use of end stops, end plates and separators. Check that the enclosure can accommodate the cable bending radius and that the earth stud and entry location will permit the required number of terminals to be fitted

Weidmuller	
BK4 (4 way)	18
BK6 (6 way)	12
BK12 (12 way)	6
MK 6/4	14
MK 6/6	8
SAK 2.5	110
SAK 4	110
SAK 6N	82
SAK 10	66
SAK 16	54
SAK 35	36

Entrelec	
MA2.5/5	132
M4/6	110
M6/8	82
M10/10	66
M16/12	54
M35/16	36

Phoenix	
G5\4 (4 way)	18
G5\6 (6 way)	12
G5\12 (12 way)	6
UK3 N	126
UK5 N	106
UK10 N	64
UK16 N	54
UK35 N	42

Drilling Envelope Dimensions (mm)

	Side A - C	Side B - D
Width	150	136
Height	85 (x2)	85

Gland Entry Matrix *

Size	Side A - C	Side B - D
M16	18	9
M20	12	6
M25	8	4
M32	4	2
M40	4	2

* Using standard gland clearances

Specifications

Part Number	Material	Width (mm)	Length (mm)	Depth (mm)	Weight (g)
ZP18	Polycarbonate (RAL7035)	360	200	150	1850
ZP18 ABS	ABS (RAL7035)	360	200	150	1625

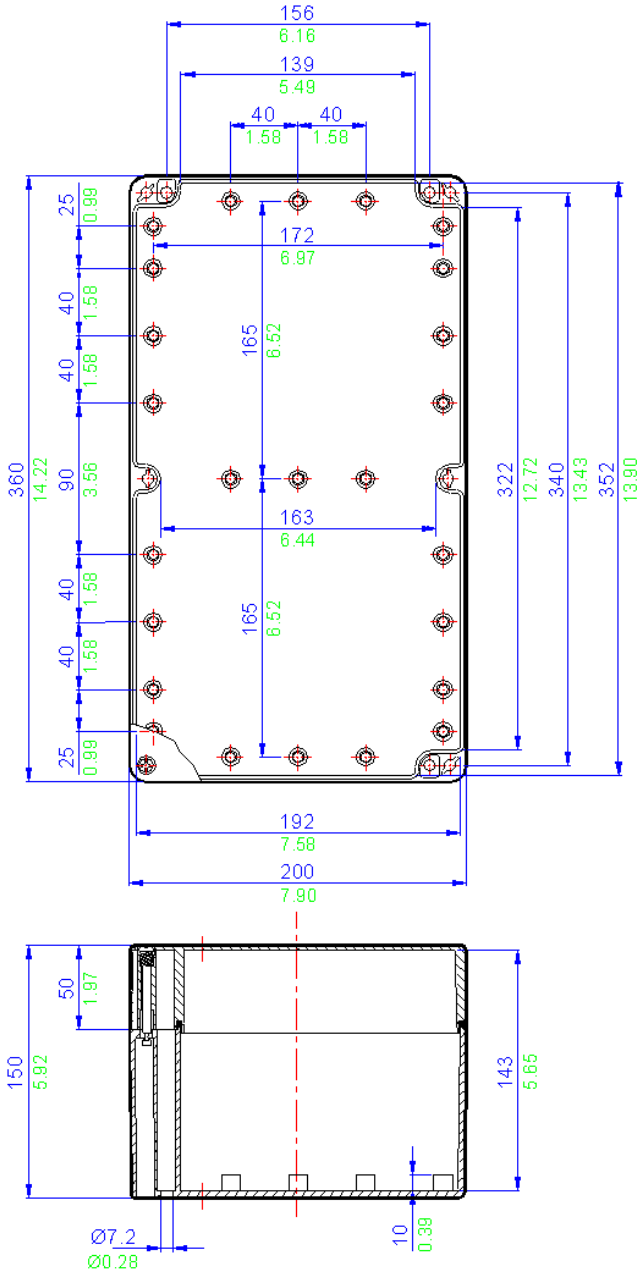

All **blue** dimensions in mm, all **green** dimensions in decimal inches (drawing not to scale)

ZP19 / ZP19 ABS ABS and Polycarbonate Enclosures IP65

Application
Industrial areas

Protection Degree
IP65

Certification
NEMA Types 1, 4X, 12
UL

Material
Moulded Polycarbonate - grey (RAL7035) or
Moulded ABS – grey (RAL7035)

Temperature Rating
Polycarbonate versions:
-40˚ to 120˚ C (-94˚ to 248˚ F)
ABS versions:
-40˚ to 65˚ C (-94˚ to 149˚ F)

Power Rating
Not Applicable

Terminal Populations (Maximum Number of Rails = 1)

Calculations do not include the use of end stops, end plates and separators. Check that the enclosure can accommodate the cable bending radius and that the earth stud and entry location will permit the required number of terminals to be fitted

Weidmuller	
BK4 (4 way)	10
BK6 (6 way)	6
BK12 (12 way)	4
MK 6/4	6
MK 6/6	4
SAK 2.5	56
SAK 4	56
SAK 6N	42
SAK 10	34
SAK 16	28
SAK 35	18

Entrelec	
MA2.5/5	68
M4/6	56
M6/8	42
M10/10	34
M16/12	28
M35/16	20

Phoenix	
G5\4 (4 way)	10
G5\6 (6 way)	6
G5\12 (12 way)	4
UK3 N	64
UK5 N	54
UK10 N	32
UK16 N	28
UK35 N	22

Drilling Envelope Dimensions (mm)

	Side A - C	Side B - D
Width	130	186
Height	44 (x2)	44

Gland Entry Matrix *

Size	Side A - C	Side B - D
M16	8	5
M20	6	4
M25	0	0
M32	0	0
M40	0	0

* Using standard gland clearances

Specifications

Part Number	Material	Width (mm)	Length (mm)	Depth (mm)	Weight (g)
ZP19	Polycarbonate (RAL7035)	300	230	110	1250
ZP19 ABS	ABS (RAL7035)	300	230	110	1025

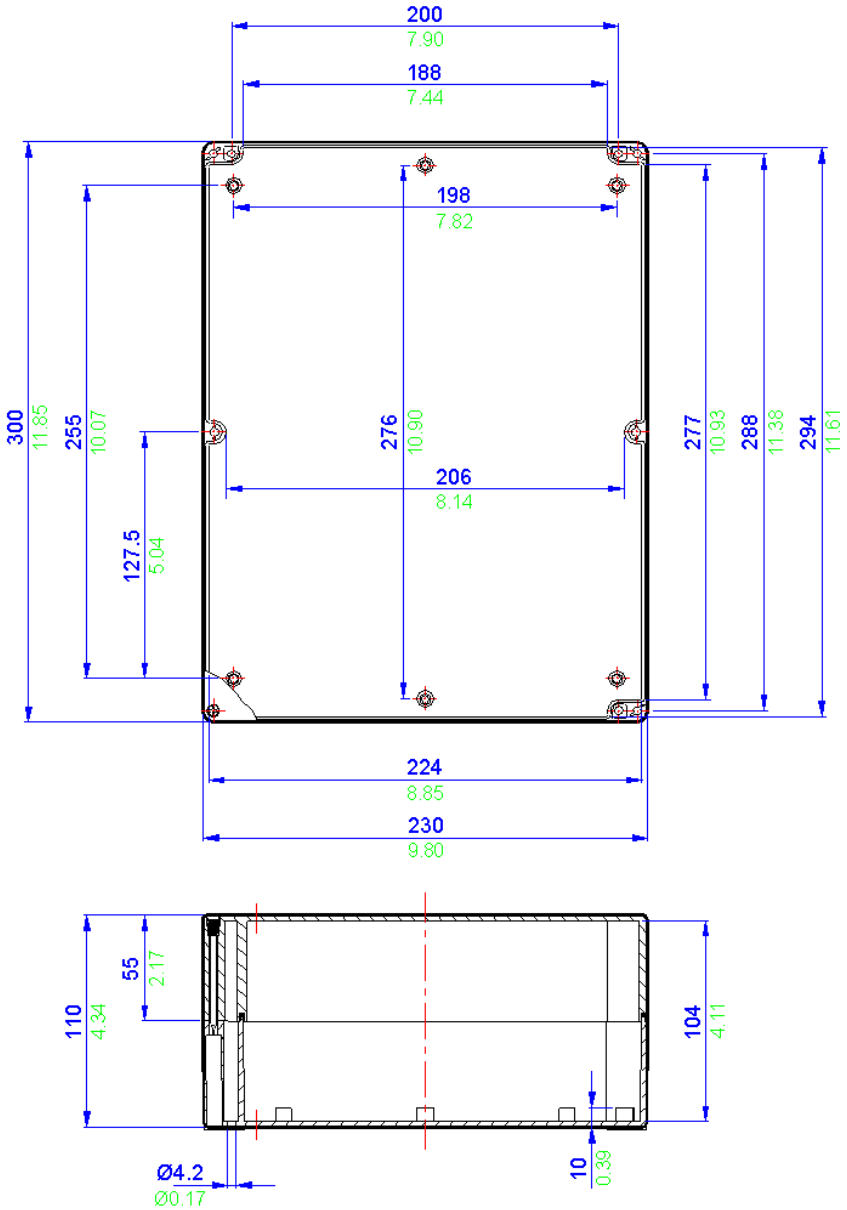

All **blue** dimensions in mm, all **green** dimensions in decimal inches (drawing not to scale)

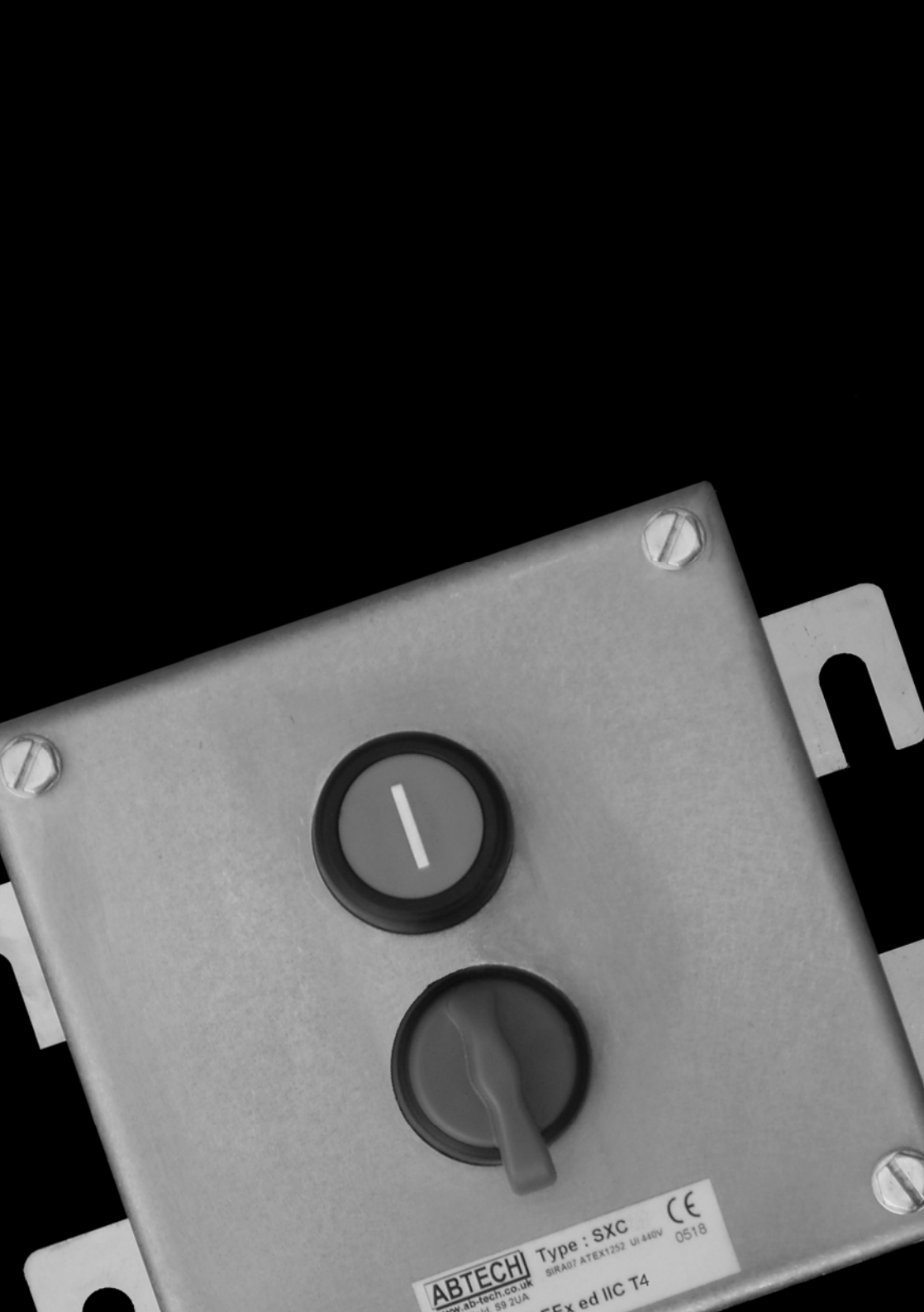
ABTECH
www.ab-tech.co.uk
Type : SXC
SIRA07 ATEX1252 UI 440V
0518
Ex ed IIC T4

Other Products

GRN Junction Boxes

BPC Control Stations

SXC Control Stations

Submersible Enclosures

GRN Enclosures

The ABTECH GRN8 enclosure has been designed as a cost-effective junction box for use in hazardous areas. There are a number of terminal and entry configurations available, resulting in a highly versatile enclosure which is suitable for a wide variety of installations. The enclosure is manufactured in a UL approved UV stabilised polycarbonate and is available as a pre-assembled terminal box or as an empty enclosure for OEM applications.

It can be supplied with the option of a terminal rail, an internal chassis plate or directly mounted terminals for cables up to 4 sq mm.

The GRN8 is a competitive product for lower risk applications in both safe and hazardous areas. It is designed to operate within the ambient temperature range of - 20°C to + 40°C (-4°F to 104°F) but for non hazardous application the upper ambient temperature range can be extended to 120°C (248°F). As well as being UV stable, polycarbonate is resistant to a wide variety of chemicals. The use of silicone rubber lid gasket and 316 stainless steel lid fixings ensures that the chemical resistance of the GRN8 is not compromised.

Earthing can be accomplished by various means. The provision of an internal/external earth/ground stud is optional or one of the terminals can be dedicated to earthing / grounding functions.

Additionally, there is the facility to mount an earth bar inside the box which can be used to terminate and connect as many earthing wires as there are cable entries. This method is useful for the equi-potential bonding of metal cable glands and an additional equi-potential wire can be linked to the internal/external earth stud to facilitate a positive connection to the 'plant dirty' earthing system. The earth bar can alternatively be used as a clean earth for instrumentation as it can be electrically isolated from the dirty earth.

The GRN8 is ATEX certified for use in Zone 1 hazardous areas EEx'e' to BS EN 50019:2000 for Zone 1 and Zone 2 applications, BS EN 50281-1 for Zone 21 and Zone 22 applications and EEx'nA' to BS EN 50021 for Zone 2 applications.

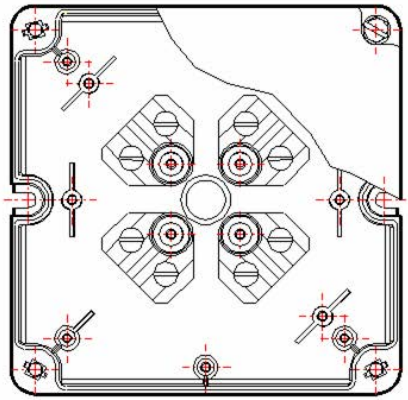

GRN8-1

Up to 8 post / mantle type EEx'e' terminals
(up to 2 x 4mm² conductors per terminal)
Star configuration

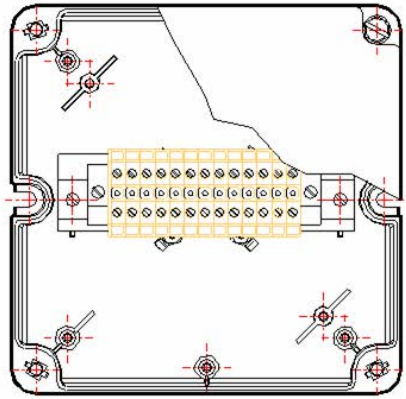

GRN8-2

Up to 13 screw/clamp type EEx'e' terminals
(for conductors up to 2.5mm²)
See table on page 200 for other terminal types
Horizontal / Vertical configuration

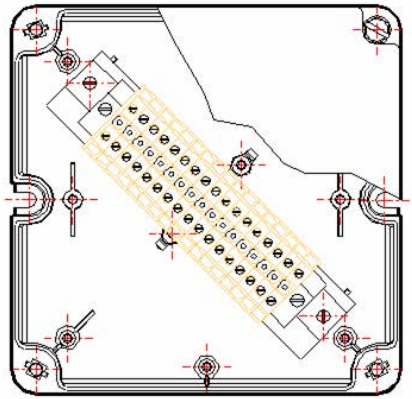

GRN8-3

Up to 17 screw/clamp type EEx'e' terminals
(for conductors up to 2.5mm²)
See table on page 200 for other terminal types
Diagonal configuration

GRN8 Range

Polycarbonate Junction Boxes

IP65

Application
Industrial and Hazardous areas

Protection Degree
IP65

Certification
ATEX EEx e T6 (Zone 1 & Zone 2) to BS EN 50019
ATEX EEx e T85°C (Zone 1 & Zone 2) to BS EN 50281-1-1

Material
Moulded Polycarbonate (Black)

Temperature Rating
Standard: -40º to 80º C (-40º to 176º F)
Option: -40º to 120º C (-48º to 248º F)
ATEX Certified Version
-20º to 40º C (-4°F to 104°F)

Power Rating
10.0W

Terminal Populations (Maximum Number of Rails = 1)

Weidmuller	
BK4 (4 way)	3
BK6 (6 way)	2
BK12 (12 way)	1
MK 6/4	2
MK 6/6	1
SAK 2.5	17
SAK 4	17
SAK 6N	14
SAK 10	11
SAK 16	9
SAK 35	5
WDU 2.5	20
WDU 4	17
WDU 6	14
WDU 10	11
WDU 16	9

Entrelec	
MA2.5/5	21
M4/6	17
M6/8	14
M10/10	11
M16/12	9
M35/16	6

Phoenix	
G5\4 (4 way)	3
G5\6 (6 way)	2
G5\12 (12 way)	1
UK 3N	21
UK 5N	17
UK 10N	11
UK 16N	9
UK 35N	7

Drilling Envelope Dimensions (mm)

	Side A - C	Side B - D
Width	54 (x2)	48 (x2)
Height	75	75

Gland Entry Matrix *

Size	Side A - C	Side B - D
M16	4	4
M20	4	4
M25	2	2
M32	0	2
M40	0	0

* Using standard gland clearances

Specifications

Part Number	Material	Width (mm)	Length (mm)	Depth (mm)	Weight (g)
GRN8-1	Moulded Polycarbonate	160	160	90	500
GRN8-2	Moulded Polycarbonate	160	160	90	500
GRN8-3	Moulded Polycarbonate	160	160	90	500

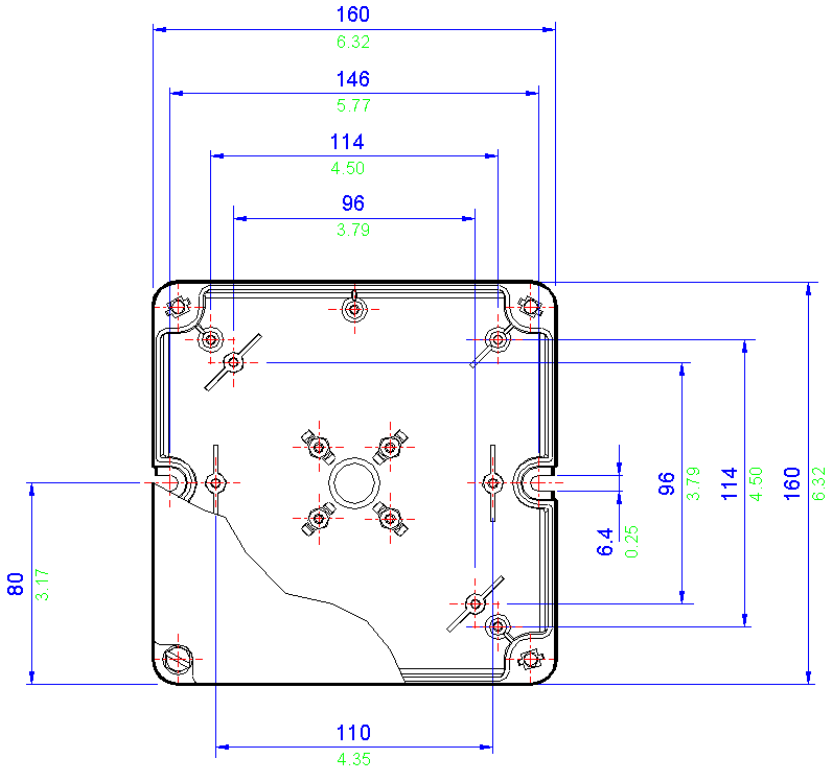
160
6.32
146
5.77
114
4.50
96
3.79
80
3.17
6.4
0.25
96
3.79
114
4.50
160
6.32
110
4.35

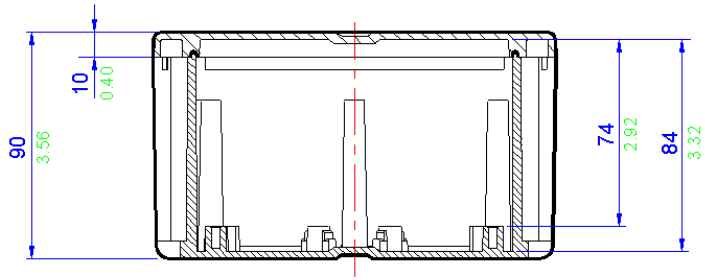
90
3.56
10
0.40
74
2.92
84
3.32

ABCS Range

Control Stations

IP66

Application
Hazardous areas

Protection Degree
IP66

Certification
ATEX II 2 GD Ex ed IIC T4
IEC Ex

Material
Carbon Loaded Glass Reinforced Polyester (Black)

Temperature Rating
-20° to 55° C (-4° to 131° F)

Maximum Voltage
415V

Maximum Switching Current
6A

Specifications

Part Number	Material	Width (mm)	Length (mm)	Depth (mm)	Weight (g) *
ABCS6 xx	Glass Reinforced Polyester	122	120	90	750
ABCS 7 xx	Glass Reinforced Polyester	220	120	90	1060
ABCS 8 xx	Glass Reinforced Polyester	160	160	90	1060
ABCS 9 xx	Glass Reinforced Polyester	260	160	90	1170
ABCS 10 xx	Glass Reinforced Polyester	360	160	90	2150
ABCS 11 xx	Glass Reinforced Polyester	560	160	90	3200
ABCS 12 xx	Glass Reinforced Polyester	255	250	120	3200
ABCS 13 xx	Glass Reinforced Polyester	400	250	120	3650
ABCS 14 xx	Glass Reinforced Polyester	600	250	120	5235
ABCS 15 xx	Glass Reinforced Polyester	400	405	120	5580

* Weight specified is enclosure only. Total weight depends on actuator configuration

Notes

The ABCS range of control stations have been designed for use in potentially explosive atmospheres and are suitable for most gas groups including hydrogen. Based on the popular BPGC range of enclosures, they are manufactured from carbon loaded glass reinforced polyester (GRP). This material gives excellent mechanical strength and life expectancy, making these control stations particularly suitable for use in harsh environmental conditions. Additionally, the anti-static properties of the enclosure material make them ideal for use in dust hazard environments. A number of common actuator types can be fitted, including Start, Stop, Emergency Stop and rotary type switches. Tag and individual actuator labels can be fitted as required.

Some typical arrangements of control station size and actuator layouts are shown on the page opposite, however, we are able to supply many other variants as dictated by your required design. Please contact our Sales office for further details.

ABCS Range

ABCS13 10

Control Elements; (x2) Key Switch, Selector, Start, Illuminated Red Indicator, Emergency Stop. Mounted in BPGC13 Enclosure
(400 x 150 x 120mm). Glands: 2 x M25

ABCS7 3

Control Elements;
Key Switch, Start, Emergency Stop
Mounted in BPGC7 Enclosure
(220 x 120 x 90mm)
Glands;
1 x M25

ABCS62

Control Elements;
Start, Stop
Mounted in BPGC6 Enclosure
(122 x 120 x 90mm)
Glands;
1 x M25

SXCS Range

Control Stations

IP66

Application
Hazardous areas

Protection Degree
IP66

Certification
ATEX II 2 GD Ex de IIC T4
IEC Ex

Material
Stainless steel 316 (1.4404)

Temperature Rating
-20º to 55º C (-4º to 131º F)

Maximum Voltage
415V

Maximum Switching Current
6A

Specifications

Part Number	Material	Width (mm)	Length (mm)	Depth (mm)	Weight (g) *
SXCS66 xx	Stainless steel 316 (1.4404)	152	152	102	2200
SXCS0 xx	Stainless steel 316 (1.4404)	152	229	140	3200
SXCS0.5 xx	Stainless steel 316 (1.4404)	184	274	140	5000
SXCS1 xx	Stainless steel 316 (1.4404)	234	324	140	6300
SXCS1.5 xx	Stainless steel 316 (1.4404)	306	306	140	7300
SXCS2 xx	Stainless steel 316 (1.4404)	372	324	140	9500
SXCS3 xx	Stainless steel 316 (1.4404)	372	448	140	11300
SXCS4 xx	Stainless steel 316 (1.4404)	372	510	140	12700
SXCS5 xx	Stainless steel 316 (1.4404)	510	510	140	17000
SXCS6 xx	Stainless steel 316 (1.4404)	510	780	140	24000
SXCS7 xx	Stainless steel 316 (1.4404)	650	950	140	35000
SXCS8 xx	Stainless steel 316 (1.4404)	800	1250	140	40000

* Weight specified is enclosure only. Total weight depends on actuator configuration

Notes

The SXCS range of control stations have been designed for use in potentially explosive atmospheres and are suitable for all gas groups including hydrogen. Based on the SX range of enclosures, they are manufactured from high quality 316 stainless steel. This material offers the highest degree of environmental protection and is suitable for even the most arduous of conditions. Additionally, stainless steel prevents the build up of static electricity, making these controls stations ideal for use in dust hazard applications.

SXCS3 25

Control Elements; (x5) Key Switch, Start, Selector,
Illuminated Green Indicator, Emergency Stop.
Mounted in SX3 Enclosure
(372 x 448 x 140mm). Glands: 2 x M25

SXCS6 2

Control Elements;
Start, Stop
Mounted in SX66 Enclosure
(152 x 152 x 102mm)
Glands;
1 x M25

Submersible Enclosures

By definition, a submersible enclosure is one which provides complete protection to live or moving parts within the enclosure. Such protection being against the ingress of dust (or other contaminants) as well as protection against the ingress of water.

There are two distinct IP rating for submersible enclosures. These are:
IPX7 - submersion in one metre of water for 30 minutes, and IPX8 - submersion depth and duration to be agreed between manufacturer and client. The degree of protection provided is normally specified to a maximum depth for a pre-determined duration and defined frequency of duration for example "up to 20 metres for 72 hours – weekly". IEC 529 - BS 5345 Part 1 relates to IP 68.

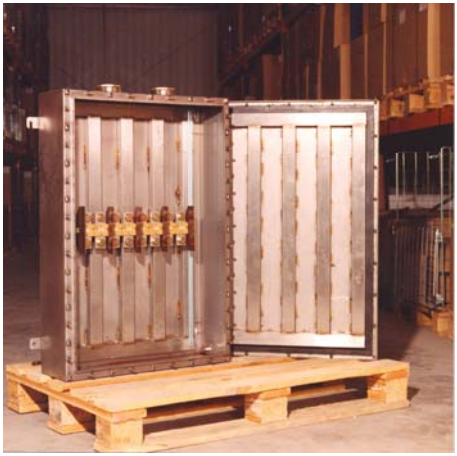

ABTECH designed their first submersible terminal box over 15 years ago. The IP Rating standard in use at the time was BS5490:1977. This, like its modern replacement BS EN 60529:1992, lists both the test method for ingress protection and the acceptance criteria. In general, the acceptance criteria for water penetration is that the amount of water entering the enclosure, if any, shall be insufficient to interfere with the safety and operation of the equipment inside. However, if the operating requirements include indefinite submersion the only realistic amount of water that can be tolerated is none.

The difficulty in detecting small quantities of water is that water may be present as a vapour, and therefore invisible. In time limited tests water may enter an enclosure in quantities small enough to increase the humidity inside the box, but this would not be apparent using a visual check since it would be invisible. A more objective measurement technique is required.

With the assistance of the University of Sheffield, ABTECH devised a method of detecting very small quantities of water. Two identical enclosures are required, one as a test box and one as a control. A conditioning room is set up in a location with constant humidity. The room must then be equipped with a calibrated high resolution analytical balance. Each box is left open in the same part of the conditioning room, close to the balance for 24 hours to ensure that they are both at the same temperature and both contain air at the same relative humidity. Using the balance one sachet of desiccant is weighed and quickly inserted into each box. The boxes are immediately closed and the lids secured. The weight of the desiccant in each box is recorded. The test box is then subject to the test as agreed with the client or as stated in the current British or international standard. The control box is left in the conditioning room.

When the test is completed the test box is thoroughly dried on the outside and left for several hours, preferably overnight, in a dry place outside of the conditioning room. This ensures that any extraneous water on the outside of the box has evaporated. The test box is then returned to the conditioning room. Both boxes are opened and quickly the desiccant is weighed again. The results are recorded. If no water has entered the test box the increase in weight of each sachet of desiccant will be the same. This is because they have both absorbed all the moisture in the air that was trapped inside the boxes. If any water has entered the test box the desiccant from that box will show a greater increase in weight. It should be noted, however, that it is only possible to measure the amount of water vapour absorbed by the desiccant within the accuracy limits of the balance.

ABTECH have devoted much development effort to the concept of submersible enclosures. Small enclosures are eminently suitable for submersible applications. They are relatively stiff and have little surface area for water pressure to act upon. For shallow depths (less than 1m) submersion is generally achievable using standard off the shelf enclosures e.g. the ABTECH ZAG, BPG and SX ranges of enclosures. However, boxes soon become large enough to require reinforcement. A box of only 300mm cube in 10 metres of water will experience over a tonne of pressure on each of its six sides.

The actual forces that will be experienced need to be calculated and reinforcement needs to be added whilst leaving as much internal volume as possible free for components, even if that means using external reinforcement.

Added to this is the problem of preventing the cover sealing edges from cutting through the gasket, and reinforced boxes can be very heavy so it may also be necessary to include lifting eyes.

Manufacturing must be of the highest quality. It is essential to ensure high quality welding on fabricated boxes, correctly specified for both the static and dynamic loading they may have to withstand. Water under pressure will find the tiniest pin hole and will leak into the box until the air pressure inside is equal to the water pressure outside.

Once the necessary calculations have been completed then rigorous testing must be endured to ensure that the design meets the pre-agreed requirements of enclosure submersion.

Where submersion over elongated periods of time are to be catered for then consideration must also be given to enclosure material. By far the most flexible material available for submersible applications is marine grade 316L stainless steel.

With non-submersible applications, cable entry is usually through a proprietary cable gland which itself will normally qualify for an IP rating similar to that of the enclosure to which it is applied. However, due to the greater pressures present with submersible enclosures, cable entry is normally achieved through welded stainless steel hubs suitably positioned to receive incoming multi-core cables.

As with all enclosure applications reliance is placed on the equipment installer to ensure that proper engineering practices are adhered to in order to ensure that the siting and installation of ABTECH Submersible Enclosures is within agreed conditions.

ABTECH have designed submersible boxes for use in a wide variety of applications ranging from prestige projects such as the underwater lighting in Trafalgar Square to severe applications on the legs of unmanned offshore installations.

If you have a submersible box application, the ABTECH technical staff will be happy to advise further.

Cable Glands and Adaptors

ASG Non-Armoured Glands

AAG Armoured Glands

ABAD Adaptors

ABRE Reducers

ABSP Stopping Plugs

Accessories

ASG

Non-Armoured Glands

IP66/7

Gland Type
Unarmoured

Sealing Area
Cable Outer Sheath

Application
Industrial and Hazardous areas

Protection Degree
IP66 and 67 to IEC529

Certification
Zone1, Zone2, Zone21 and Zone22,
Gas Groups IIA, IIB and IIC
Baseefa09AATEX0187X
IEC Ex: IECEx BAS 09.0089X

Material
Brass, Brass nickel plated or Stainless Steel

Temperature Rating
-60º to 80º C (-76º to 176º F)

Technical Drawing

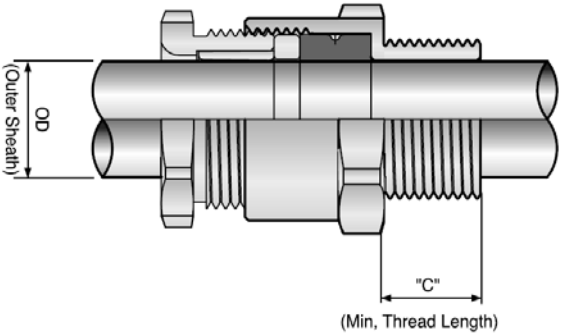

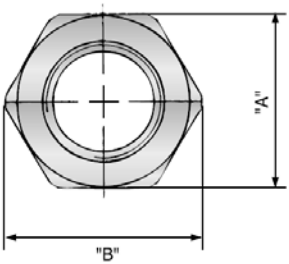

Accessories

Lock-Nut, Sealing washer, serrated washer, Earth Tag and PVC Shroud are available

Cable Gland Size	Entry Thread Size		Cable Acceptance Details (Outer Sheath 'OD')				Hexagon Dimension		Min Thread Length "C"	
	Metric	NPT	Standard Seal		Alternative Seal (S)		Across Flats "A"	Across Corners "B"	Metric	NPT
			Min.	Max	Min.	Max				
ASG-M16a	M16	-	3.0	6.0	-	-	22.0	24.5	15.0	-
ASG-M16b			6.1	10.0	4.0	8.0				
ASG-M20a	M20	1/2"	3.0	6.0	-	-	24.0	26.8		20.0
ASG-M20b			6.1	10.0	4.0	8.0				
ASG-M20c			10.1	15.0	8.5	13.0	27.0	30.0		
ASG-M25	M25	3/4"	12.0	18.0	10.0	15.0	32.0	35.5		
ASG-M32a	M32	1"	18.1	23.0	16.0	21.0	39.0	43.5		25.0
ASG-M32b			22.1	26.0	20.0	24.0				
ASG-M40	M40	1 1/4"	26.1	32.0	22.0	28.0	48.0	53.5		25.6
ASG-M50	M50	1 1/2"	32.1	40.0	27.5	35.0	58.0	64.0		26.0
ASG-M63a	M63	2"	40.1	47.0	38.0	44.0	73.0	81.0		27.0
ASG-M63b			47.1	54.0	43.0	50.0				
ASG-M75	M75	2 1/2"	55.1	65.0	51.0	58.0	85.0	94.0		40.0
ASG-M80	M80	3"	65.1	71.5	61.0	67.0	100.0	109.5	20.0	41.5
ASG-M90	M90		71.6	77.6	68.0	73.0	105.0	113.5		
ASG-M100a	M100	4"	73.5	86.0	-	-	122.0	135.0		44.0
ASG-M100b		-	80.0	92.0	-	-	122.0	135.0		-
ASG-M115a	M115	-	86.0	98.0	-	-	138.0	152.0		-
ASG-M115b		-	92.0	102.0	-	-	138.0	152.0		-
ASG-M130a	M130	-	97.0	110.0	-	-	154.0	168.0		-
ASG-M130b		-	104.0	116.0	-	-				-

AAG

Armoured Glands

IP66/7

Gland Type
Armoured
(suitable for wire armour and
wire braid cable types

Seal Type
Double Compression

Application
Industrial and Hazardous areas

Protection Degree
IP66 and 67 to IEC529

Certification
Zone1, Zone2, Zone21 and Zone22,
Gas Groups IIA, IIB and IIC
Flameproof Exd and Increased Safety Exe
Baseefa09AATEX0186X
IEC Ex: IECEx BAS 09.0088X

Material
Brass, Brass nickel plated or Stainless Steel

Temperature Rating
-60º to 80º C (-76º to 176º F)

Technical Drawing

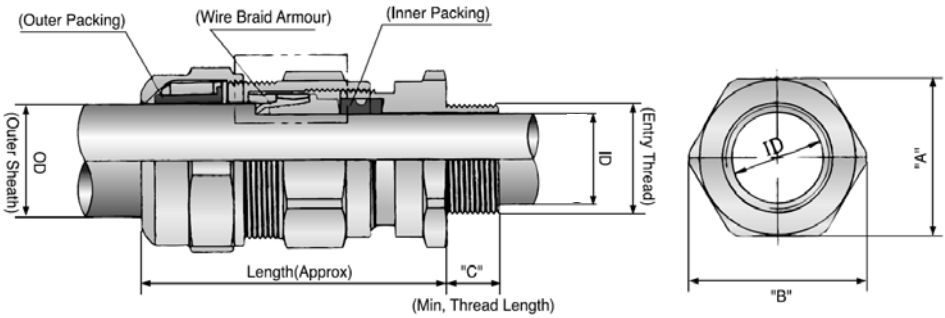

Accessories

Lock-Nut, Sealing washer, serrated washer, Earth Tag and PVC Shroud are available

Gland Size	Entry Thread Size		Cable Acceptance Details								Hexagon Dimensions		Thread Length "C"	
			Inner Sheath 'ID'				Outer Sheath 'OD'		Armour Size					
			Standard Size		Alternative Seal (S)				W	X	Across Flats "A"	Across Corners "B"		
	Metric	NPT	Min	Max	Min	Max	Min	Max	Min/Max	Min/Max			Metric	NPT
AAG-20a	M20/M16	1/2"	5.5	8.0	-	-	7.0	12.0	0.9/1.25	0/0.7	24.0	26.8	15.0	20.0
AAG-20b			7.5	9.0	5.5	8.0	11.0	16.0						
AAG-20d	M20	3/4"	11.0	13.7	8.5	12.0	14.3	20.0			30.0	33.5		
AAG-25a	M25	1"	13.0	16.7	10.5	15.4	18.5	26.0	1.25/1.6		36.0	40.5		25.0
AAG-32	M32	1 1/4"	20.0	23.5	15.0	21.2	24.0	33.0	1.6/2.0		45.8	51.2		25.6
AAG-40a	M40	1 1/2"	22.0	28.0	25.0	30.0	28.0	35.0			55.0	61.5		26.0
AAG-40	M40	1 1/4"	25.0	30.0	22.0	28.0	30.0	41.0						25.6
		1 1/2"												26.0
AAG-50a	M50	2"	27.5	36.5	31.5	41.0	42.0	52.6	1.8/2.5	0/1.0	65.0	72.8		27.0
AAG-50	M50	1 1/2"	31.5	41.0	27.5	36.5	42.0	52.6						26.0
		2"												27.0
AAG-63a	M63	2 1/2"	39.0	47.0	42.5	53.0	46.0	56.0			80.0	89.5		40.0
AAG-63	M63	2"	42.5	53.0	39.0	47.0	52.0	65.5						27.0
		2 1/2"												40.0
AAG-75a	M75	2 1/2"	49.0	58.3	54.5	64.3	57.0	67.0			95.0	104.5		41.5
AAG-75	M75	2 1/2"	54.5	64.3	49.0	58.3	64.0	78.3						40.0
		3"												41.5
AAG-80	M80	3 1/2"	67.0	70.0	60.0	68.0	75.0	89.5	1.8/3.2		107.0	114.0	20.0	42.7
AAG-90	M90			75.0							115.0	123.0		
AAG-100	M100	4"	76.5	89.5	70.0	81.0	88.0	104.5			128.0	139.0		44.0

ABAD

Adaptors

IP66/7

Application
Industrial and Hazardous areas

Protection Degree
IP66 and 67 to IEC529

Certification
II2 GD EExd IIC / Exe II
Zone1, Zone2, Zone21 and Zone22,
Baseefa 09ATEX0188X
IEC Ex: IECEx BAS 09.0090X

Material
Brass or Brass nickel plated or
Stainless Steel

Technical Drawing

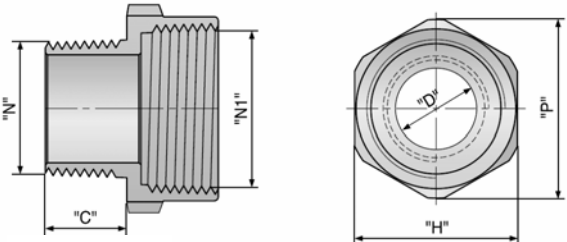

(Min Thread Length)

Accessories

Lock-Nut, Sealing washer, serrated washer, Earth Tag and PVC Shroud are available

Entry Hole Size (NPT)	Part Number	Thread		Hexagon		D	Min C	Gland Thread Size
		N (M)	N1 (F)	H	P			
1/2"	ABAD-N1220	1/2	M20	24	26.8	14.5	15.5	M20
	ABAD-N1225		M25	30	33.5			M25
	ABAD-N1232		M32	36	40.5			M32
	ABAD-N1234		3/4"	32	35			3/4"
	ABAD-N121		1"	40	44			1"
3/4"	ABAD-N3425	3/4"	M25	30	33.5	20	16	M25
	ABAD-N3432		M32	36	40.5			M32
	ABAD-N3440		M40	45.8	51.2			M40
	ABAD-N341		1"	40	44			1"
	ABAD-N34114		1 1/4"	45.8	51.2			1 1/4"
1"	ABAD-N132	1"	M32	36	40.5	26.5	20	M32
	ABAD-N140		M40	45.8	51.2			M40
	ABAD-N150		M50	55	61.5			M50
	ABAD-N1114		1 1/4"	45.8	51.2			1 1/4"
	ABAD-N1112		1 1/2"	45.8	51.2			1 1/2"
1 1/4"	ABAD-N11440	1 1/4"	M40	45.8	51.2	32.5	20	M40
	ABAD-N11450		M50	55	61.5			M50
	ABAD-N11463		M63	70	77			M63
	ABAD-N114112		1 1/2"	45.8	51.2			1 1/2"
	ABAD-N1142		2"	65	72			2"
1 1/2"	ABAD-N11250	1 1/2"	M50	55	61.5	42.5	20.5	M50
	ABAD-N11263		M63	70	77			M63
	ABAD-N11275		M75	80	88.5			M75
	ABAD-N1122		2"	65	72			2"
	ABAD-N112212		2 1/2""	80	89.5			2 1/2"
2"	ABAD-N263	2"	M63	70	77	54.5	21	M63
	ABAD-N275		M75	80	88.5			M75
	ABAD-N285		M85	90	99			M85
	ABAD-N2212		2 1/2"	80	89.5			2 1/2"
	ABAD-N23		3"	100	110			3"
2 1/2"	ABAD-N21275	2 1/2"	M75	80	88.5	65.4	32	M75
	ABAD-N21285		M85	90	99			M85
	ABAD-N2123		3"	100	110 00			3"
	ABAD-N2124		4"	125	137			4"
3"	ABAD-N385	3"	M85	90	99	65.4	33.5	M85
	ABAD-N34		4"	125	137			4"

Entry Hole Size (metric)	Part Number	Thread		Hexagon		D	Min C	Gland Thread Size
		N (M)	N1 (F)	H	P			
M16	ABAD-M1620	M16	M20	24	26.8	11	15	M20
	ABAD-M1625		M25	30	33.5			M25
	ABAD-M1632		M32	36	40.5			M32
	ABAD-M1612		1/2"	30	33.5			3/4"
	ABAD-M1634		3/4"	32	35			1"
M20	ABAD-M2025	M20	M25	30	33.5	15		M25
	ABAD-M2032		M32	36	40.5			M32
	ABAD-M2040		M40	45.8	51.2			M40
	ABAD-M2034		3/4"	32	35			1"
	ABAD-M201		1"	40	44			1 1/4"
M25	ABAD-M2532	M25	M32	36	40.5	20.2		M32
	ABAD-M2540		M40	45.8	51.2			M40
	ABAD-M2550		M50	55	61.5			M50
	ABAD-M251		1"	40	44			1"
	ABAD-M25114		1 1/4"	45.8	51.2			1 1/4"
M32	ABAD-M3240	M32	M40	45.8	51.2	26.5		M40
	ABAD-M3250		M50	55	61.5			M50
	ABAD-M3263		M63	70	77			M63
	ABAD-M32114		1 1/4"	45.8	51.2			1 1/4"
	ABAD-M32112		1 1/2"	45.8	51.2			1 1/2""
M40	ABAD-M4050	M40	M50	55	61.5	32.5		M50
	ABAD-M4063		M63	70	77			M63
	ABAD-M4075		M75	80	88.5			M75
	ABAD-M40112		1 1/2"	45.8	51.2			1 1/2""
	ABAD-M402		2"	65	72			2"
M50	ABAD-M5063	M50	M63	70	77	44.5		M63
	ABAD-M5075		M75	80	88.5			M75
	ABAD-M5085		M85	90	99			M85
	ABAD-M502		2"	65	72			2"
	ABAD-M50212		2 1/2"	80	89.5			2 1/2""
M63	ABAD-M6375	M63	M75	80	88.5	56.5		M75
	ABAD-M6385		M85	90	99			M85
	ABAD-M63212		2 1/2"	80	89.5			2 1/2""
	ABAD-M633		3"	100	110			3"
M75	ABAD-M7585	M75	M85	90	99	68.3		M85
	ABAD-M754		4"	125	137			4"

ABRE

Reducers

IP66/7

Application
Industrial and Hazardous areas

Protection Degree
IP66 and 67 to IEC529

Certification
II2 GD EExd IIC / Exe II
Zone1, Zone2, Zone21 and Zone22,
Baseefa 09ATEX0188X
IEC Ex: IECEx BAS 09.0090X

Material
Brass or Brass nickel plated or
Stainless Steel

Technical Drawing

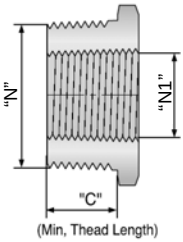

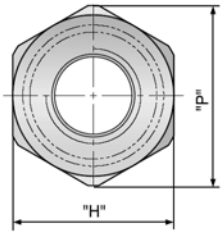

Accessories

Lock-Nut, Sealing washer, serrated washer, Earth Tag and PVC Shroud are available

Entry Hole Size (NPT)	Part Number	Thread		Hexagon		Min C	Gland Thread Size
		N (M)	N 1 (F)	H	P		
1/2"	ABRE-N1216	1/2"	M16	24	26.8	15	M16
3/4"	ABRE-N3412	3/4"	1/2"	30	33.5	16	1/2"
	ABRE-N3416		M16	30	33.5	16	M16
	ABRE-N3420		M20	30	33.5	16	M20
1"	ABRE-N112	1"	1/2"	36	40.5	20	1/2"
	ABRE-N134		3/4"	36	40.5	20	3/4"
	ABRE-N120		M20	36	40.5	20	M20
	ABRE-N125		M25	36	40.5	20	M25
1 ¼"	ABRE-N11412	1 1/4"	1/2"	45.8	51.2	20	1/2"
	ABRE-N11434		3/4"	45.8	51.2	20	3/4"
	ABRE-N1141		1"	45.8	51.2	20	1"
	ABRE-N11425		M25	45.8	51.2	20	M25
	ABRE-N11432		M32	45.8	51.2	20	M32
1 1/2"	ABRE-N11234	1 1/2"	3/4"	52	57.5	20.5	3/4"
	ABRE-N1121		1"	52	57.5	20.5	1"
	ABRE-N112114		1 1/4"	52	57.5	20.5	1 1/4"
	ABRE-N11232		M32	52	57.5	20.5	M32
	ABRE-N11240		M40	52	57.5	20.5	M40
2"	ABRE-N21	2"	1"	63	70	21	1"
	ABRE-N2114		1 1/4"	63	70	21	1 1/4"
	ABRE-N2112		1 1/2"	63	70	21	1 1/2"
	ABRE-N240		M40	63	70	21	M40
	ABRE-N250		M50	63	70	21	M50
2 1/2"	ABRE-N212114	2 1/2"	1 1/4"	80	88.5	32	1 1/4"
	ABRE-N212112		1 1/2"	80	88.5	32	1 1/2"
	ABRE-N2122		2"	80	88.5	32	2"
	ABRE-N21250		M50	80	88.5	32	M50
	ABRE-N21263		M63	80	88.5	32	M63
3"	ABRE-N3112	3"	1 1/2"	95	105	33.5	1 1/2"
	ABRE-N32		2"	95	105	33.5	2"
	ABRE-N3212		2 1/2"	95	105	33.5	2 1/2"
	ABRE-N363		M63	95	105	33.5	M63
	ABRE-N375		M75	95	105	33.5	M75
4"	ABRE-N42	4"	2"	128	139	36	2"
	ABRE-N4212		2 ½"	128	139	36	2 ½"
	ABRE-N43		3"	128	139	36	3"
	ABRE-N475		M75	128	139	36	M75
	ABRE-N485		M85	128	139	36	M85

Entry Hole Size (metric)	Part Number	Thread		Hexagon		Min C	Gland Thread Size
		N (M)	N1 (F)	H	P		
M20	ABRE-M2016	M20	M16	24	26.8	15	M16
M25	ABRE-M2512	M25	1/2"	30	33.5		1/2"
	ABRE-M2516		M16	30	33.5		M16
	ABRE-M2520		M20	30	33.5		M20
M32	ABRE-M3212	M32	1/2"	36	40.5		1/2"
	ABRE-M3234		3/4"	36	40.5		3/4"
	ABRE-M3216		M16	36	40.5		M16
	ABRE-M3220		M20	36	40.5		M20
	ABRE-M3225		M25	36	40.5		M25
M40	ABRE-M4012	M40	1/2"	45.8	51.2		1/2"
	ABRE-M4034		3/4"	45.8	51.2		3/4"
	ABRE-M401		1"	45.8	51.2		1"
	ABRE-M4025		M25	45.8	51.2		M32
	ABRE-M4032		M32	45.8	51.2		M25
M50	ABRE-M5034	M50	3/4"	55	61.5		1/2"
	ABRE-M501		1""	55	61.5		3/4"
	ABRE-M50114		1 1/4"	55	61.5		1"
	ABRE-M5032		M32	55	61.5		M32
	ABRE-M5040		M40	55	61.5		M40
M63	ABRE-M631	M63	1"	70	77		3/4"
	ABRE-M63114		1 1/4"	70	77		1"
	ABRE-M63112		1 1/2"	70	77		1 1/2"
	ABRE-M6340		M40	70	77		M40
	ABRE-M6350		M50	70	77		M50
M75	ABRE-M75114	M75	1 1/4"	80	88.5		1"
	ABRE-M75112		1 1/2"	80	88.5		1 1/2"
	ABRE-M752		2"	80	88.5		2"
	ABRE-M7550		M50	80	88.5		M50
	ABRE-M7563		M63	80	88.5		M63
M85	ABRE-M85112	M85	1 1/2"	90	99		1 1/2"
	ABRE-M852		2"	90	99		2"
	ABRE-M85212		2 1/2"	90	99		2 1/2"
	ABRE-M8563		M63	90	99		M63
	ABRE-M8575		M75	90	99		M75

ABSP

Stopping Plugs

IP67

Application
Industrial and Hazardous areas

Protection Degree
IP67 and IEC529

Certification
II2 GD EExd IIC / Exe II
Zone1, Zone2, Zone21 and Zone22,
Baseefa 09ATEX0189U
IEC Ex: IECEx BAS 09.0091U

Material
Brass or Brass nickel plated
or Stainless Steel

Accessories

Lock-Nut and Sealing washer are available

NPT H Series

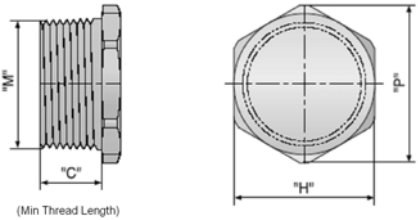

Part Number	Thread Size M	Hexagon H	Hexagon P	Min C
ABSP H-N12	1/2”	26	29	15.5
ABSP H-N34	3/4”	30	33.5	16
ABSP H-N1	1”	36	40.5	20
ABSP H-N114	1 1/4”	45.8	51.2	20
ABSP H-N112	1 1/2”	52	57.5	20.5
ABSP H-N2	2”	63	70	21
ABSP H-N212	2 1/2”	80	88.5	32
ABSP H-N3	3”	95	104.5	33.5
ABSP H-N4	4”	125	137	36

NPT RH Series

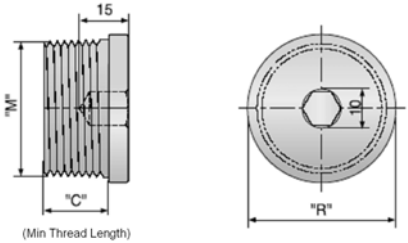

Part Number	Thread Size M	Head Dimensions R	Min C
ABSP RH-N12	1/2”	22.5	15.5
ABSP RH-N34	3/4”	26.5	16
ABSP RH-N1	1”	32	20
ABSP RH-N114	1 1/4”	39.5	20
ABSP RH-N112	1 1/2”	48	20.5
ABSP RH-N2	2”	58	21
ABSP RH-N212	2 1/2”	73	32
ABSP RH-N3	3”	85	33.5
ABSP RH-N4	4”	95	36

Metric H Series

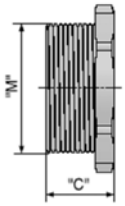

(Min Thread Length)

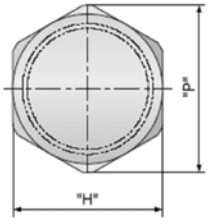

Part Number	Thread Size M	Hexagon		Min C
		H	P	
ABSP H-M16	M16x1.5	20	22	15
ABSP H-M20	M20x1.5	24	26.8	
ABSP H-M25	M25x1.5	30	33.5	
ABSP H-M32	M32x1.5	35	40.5	
ABSP H-M40	M40x1.5	45.8	51.2	
ABSP H-M50	M50x1.5	55	61.5	
ABSP H-M63	M63x1.5	70	77	
ABSP H-M75	M75x1.5	80	88.5	
ABSP H-M85	M85x1.5	90	99	

Metric RH Series

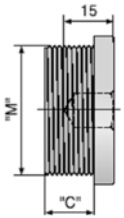

(Min Thread Length)

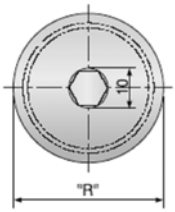

Part Number	Thread Size M	Head Dimensions R	Min C
ABSP RH-M16	M16x1.5	22.5	15
ABSP RH-M20	M20x1.5	26.5	
ABSP RH-M25	M25x1.5	32	
ABSP RH-M32	M32x1.5	39.5	
ABSP RH-M40	M40x1.5	48	
ABSP RH-M50	M50x1.5	58	
ABSP RH-M63	M63x1.5	73	
ABSP RH-M75	M75x1.5	85	
ABSP RH-M85	M85x1.5	95	

Accessories

Earth Tag

Material: Brass/Brass nickel plated

Part Number	
Metric	NPT
ABET-M16	ABET-N12
ABET-M20	ABET-N34
ABET-M25	ABET-N1
ABET-M32	ABET-N114
ABET-M40	ABET-N112
ABET-M50	ABET-N2
ABET-M63	ABET-N212
ABET-M75	ABET-N34
ABET-M80	ABET-N312
ABET-M85	ABET-N4
ABET-M90	
ABET-M100	

Serrated Washer

Material: Stainless Steel 316 or 316L

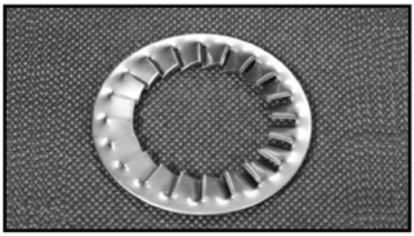

Part Number	
Metric	NPT
ABSSW-M16	ABSSW-N12
ABSSW-M20	ABSSW-N34
ABSSW-M25	ABSSW-N1
ABSSW-M32	ABSSW-N114
ABSSW-M40	ABSSW-N112
ABSSW-M50	ABSSW-N2
ABSSW-M63	ABSSW-N212
ABSSW-M75	ABSSW-N34
ABSSW-M80	ABSSW-N312
ABSSW-M85	ABSSW-N4
ABSSW-M90	
ABSSW-M100	

Lock Nut

Material: Brass/Brass nickel plated

Part Number	
Metric	NPT
ABLN-M16	ABLN-N12
ABLN-M20	ABLN-N34
ABLN-M25	ABLN-N1
ABLN-M32	ABLN-N114
ABLN-M40	ABLN-N112
ABLN-M50	ABLN-N2
ABLN-M63	ABLN-N212
ABLN-M75	ABLN-N34
ABLN-M80	ABLN-N312
ABLN-M90	ABLN-N4
ABLN-M100	

Sealing Washer

Part Number	
Metric	NPT
ABSW-M16	ABSW-N12
ABSW-M20	ABSW-N34
ABSW-M25	ABSW-N1
ABSW-M32	ABSW-N114
ABSW-M40	ABSW-N112
ABSW-M50	ABSW-N2
ABSW-M63	ABSW-N212
ABSW-M75	ABSW-N34
ABSW-M80	ABSW-N312
ABSW-M85	ABSW-N4
ABSW-M90	
ABSW-M100	

PVC Shroud

Part Number	
Type A	Type B
ABSD-A20a	ABSD-B16
ABSD-A20d	ABSD-B20a
ABSD-A25	ABSD-B20b
ABSD-A32	ABSD-B25
ABSD-A40	ABSD-B32
ABSD-A50	ABSD-B40
ABSD-A63	ABSD-B50
ABSD-A75	ABSD-B63
	ABSD-B75
	ABSD-B80
	ABSD-B90

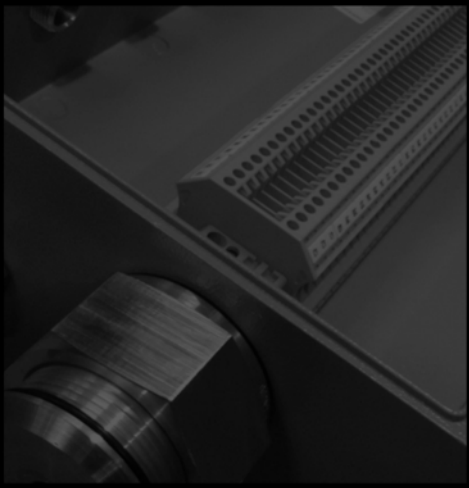

ABTECH
ABTECH
ABTECH

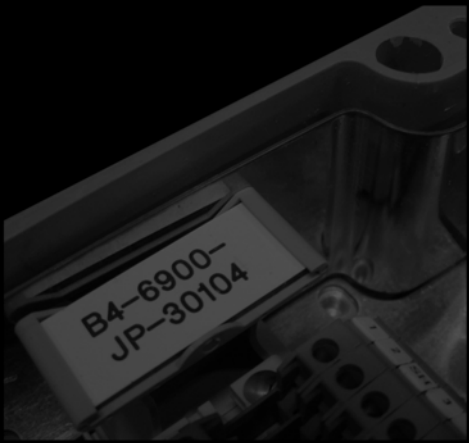
B4-6900-
JP-30104

Appendix

Technical Information

Gland Clearances

Abtech Project List

Selecting the Correct Enclosure

It is vital that the enclosure selected is suitable for the required application. The enclosure should be mechanically robust enough to contain cables and cable glands which will be fitted and the IP rating of the enclosure should be adequate to deal with the environmental conditions likely to be encountered. The enclosure should also be large enough to accommodate the terminals or components fitted and it should be considered at this stage whether or not future expansion will be necessary and to allow room for this. The ABTECH *Enclosure Calculator Software* can be used to select the correct enclosure by quickly calculating if the required terminals will fit.

Cable entry points must also be considered i.e. how many and where are they to be placed. If all the cable entry points are to be on the bottom face, for instance, this may necessitate a larger enclosure than would be necessary just to accommodate the terminals.

Terminals

Any type or make can be fitted inside ABTECH enclosures except in the case of enclosures intended for use in hazardous areas. The terminal should be matched to the type and size of cable being used and attention should be paid to the current and voltage ratings of both the terminal and cable. Any manufacturer's instructions in relation to the fitment and necessary clearance required around the terminal should be strictly adhered to. Modular terminals can be fitted to DIN standard terminal rails and these can be fitted directly to the inside of the enclosure using the fixing points which are a standard feature of ABTECH enclosures or by mounting onto a component mounting plate which is available as an option for all enclosure types and sizes.

Cable Glands

Cable glands should be selected according to the cable type, screen or armour earthing requirements and the IP rating required.
Using the ABTECH Enclosure Calculator Software will quickly let you see whether your chosen enclosure can accommodate the required number of cable glands and provide a drawing automatically. Designers should always allow enough clearance around multiple gland entries to allow for fixing nuts etc. Please refer to the drawing at the end of this section which shows ABTECH's suggested clearance dimensions for common entry sizes. Cable glands are a specialised field and the cable gland manufacturers should be contacted for technical information and help regarding the correct selection of these items.
ABTECH can supply and fit cable glands if required or we can machine the enclosure or gland plates for fitting on site. We can provide a number of different thread forms e.g. metric, NPT, PG etc. or clearance holes.

Hazardous Areas

ABTECH specialises in the design and production of junction boxes and enclosures for use in potentially hazardous areas. The SX, BPG and ZAG enclosure ranges are all certified for use in Zone 1 and Zone 2 hazardous areas. We also specialise in high voltage junction boxes for up to 11kV in Zone 1 and 35KV in Zone 2 areas. The following gives a brief guide to the protection methods used for electrical equipment in hazardous areas.

Definition

A Hazardous Area is defined as "An Area containing a potentially explosive atmosphere, which, if ignited, could give rise to damage of property or injury to persons". Hazardous areas can be found in almost every industry and even in daily life, the best example being a petrol station or a gas station.

Protection

How do we protect hazardous areas? i.e., how do we stop a potentially explosive atmosphere from igniting and destroying the installation? In order to prevent an explosion we must first understand the conditions required to cause an explosion. There are three conditions which must co-exist in order to create an explosion, fuel, air and an ignition source. This is normally known as the Ignition Triangle.

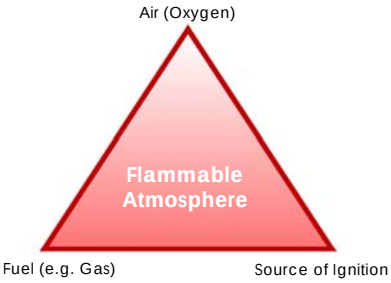

With this knowledge, it is possible to protect the equipment from one of the three elements required to cause an explosion i.e. in the case of increased safety (EEx'e') the ignition source is removed by ensuring that there are no hot surfaces or sparking components which could ignite a fuel and oxygen mixture which may enter the enclosure.

Zone Classification

Codes of practice exist for the classification of areas according to the probability or likelihood of the existence of a flammable atmosphere. This is known as Area Classification and in accordance with EN 60079–14 is typically as follows:-

Zone 0

Where a Flammable Atmosphere is continuously present or present for long periods. Permitted forms of protection: Ex 'ia', Ex 's' (for Zone 0)

Zone 1

Where a Flammable Atmosphere is likely to occur during normal operation. Permitted forms of protection; any type of protection suitable for Zone 0 and Ex 'd', Ex 'ib', Ex 'p', Ex 'e', Ex 's', Ex 'm', Ex 'q'.

Zone 2

Where a Flammable Atmosphere is not likely to occur during normal operation and if it does will only exist for a short period of time. Typically less than 10 hours per year and is often referred to as the "Remotely Hazardous Area"
Permitted forms of protection: Any type of protection suitable for Zone 0 and 1 and
Ex 'nA', Ex 'nR', Ex 'o'

Zone 20

A place in which an explosive atmosphere, in the form of a cloud of combustible dust in air, is present continuously, or for long periods or frequently for short periods.

Zone 21

A place in which an explosive atmosphere, in the form of a cloud of combustible dust in air, is likely to occur occasionally in normal operation.

Zone 22

A place in which an explosive atmosphere, in the form of a cloud of combustible dust in air, is not likely to occur in normal operation but, if it does occur, will persist for a short period only.

For all dust hazard areas the permitted forms of protection include: mD (encapsulation), iaD (intrinsically safe), pD (purged), tD (protection by enclosure). Where protection type tD is selected a plastics enclosure should only be used if the material has anti-static properties.

Types of Protection

Intrinsically Safe – Ex 'ia' (EN 50020)

This type of protection is afforded by the electrical circuit or components having insufficient energy to ignite a flammable atmosphere. Ex 'ia' equipment is safe under two fault conditions and permissible for use in Zone 0 areas. Intrinsically safe components or circuitry is normally housed in an enclosure having Ex 'e' protection although this is not always necessary. In this case it is important that the integrity of the enclosure is adequate for the area of use.

Intrinsically Safe – Ex 'ib' (EN 50020)

As above, except Ex 'ib' equipment is safe under one fault condition permissible in Zone 1 areas.

Flameproof – Ex 'd' (EN 50018)

Equipment may include arching and sparking (or incendive) devices and flammable mixtures may enter the enclosure. The enclosure construction is designed to contain an internal explosion and prevent transmission of sufficient energy to ignite a potentially flammable atmosphere outside the enclosure.

Increased Safety Ex 'e' (EN 50019)

Explosive mixtures may enter the equipment but the likelihood of a fault condition, which could result in ignition of this mixture, is significantly reduced. The components used in the apparatus shall not produce arcs or sparks or temperatures above that of ignition temperature of the

surrounding atmosphere in normal working conditions. Creepage and clearance distances for electrical insulation are increased over that of industrial equipment and insulation material must be reliable over long periods of time. A minimum ingress protection of IP54 must be provided by any enclosure containing increased safety equipment and it must also be capable of withstanding a 7Nm impact.

Pressurised – Ex 'p' (EN 50016)

Pressurised or purged apparatus Type 'p' rely on a combination of a positive static pressure applied inside the enclosure and a continuous flow of air or inert gas to expel any explosive mixture which may have entered. A monitoring system is an important part of the apparatus to ensure correct operation.

Encapsulation – Ex 'm' (EN 50028)

Encapsulation of arching and sparking components or apparatus to ensure no exposure to explosive mixtures which may be present. The surface temperature is also controlled under normal and fault conditions, thus preventing ignition from occurring.

Powder Filled – Ex 'q' (EN 50017)

Powder or sand filled enclosures housing arching and sparking devices. Often used to contain the energy released from the failure of electrical or electronic components such as the breaking of a fuse.

Non Sparking – Ex 'nA' (EN 50021)

This protection method is very similar to that of Ex 'e' and although to a higher level than industrial standards, it is less than that of Ex 'e'. Can only be used in Zone 2 areas but allows the use of fuses, disconnect terminals and other components not allowed in Ex 'e'.

Restricted Breathing – Ex 'nR' (EN 50021)

In this concept, protection is afforded by the sealing properties of the enclosure in which either hot or sparking equipment may be fitted. It is assumed that the likelihood of a flammable atmosphere being present whilst the enclosure is breathing is very remote and the sealing of the enclosure should be sufficient to protect against this.

Oil Immersion – Ex 'O' (EN 50015)

Where the sparking components are immersed in oil and controlled venting is also used. Most commonly found in older type switchgear.

Special – Ex 's'

No formal standard exists for this type of protection and it is the responsibility of the manufacturer and the relevant test authority to ensure that the apparatus is safe to use in the intended zone.

Temperature Classification & Gas Groupings

Flammable mixtures can be classified under two main characteristics in respect of explosion protection; temperature of ignition by hot surfaces and the spark energy required to ignite the mixture. The spark energy of the ignition is also related to the intensity of the explosion.

Classification of maximum surface temperatures in both North America and Europe are similar but vary slightly in the nomenclature used. The temperature classification is important to ensure that the correct equipment is matched to the flammable atmospheres that could potentially exist in an area. This will take into account such things as maximum ambient temperature and maximum operating voltage with a + 10% over voltage or an overload condition applied.

In some types of protection such as Ex 'd' or Ex 'nR' the temperature classification is based on the outside temperature of the enclosure where as in other types of protection such as Ex 'e' or Ex 'nA' the temperature classification is based on the temperature of the internal components.

It follows that equipment with a higher temperature rating and, therefore, lower operating temperature is suitable for use in a wider range of hazardous areas.

Equipment rated T6 is suitable for use with all gases and vapourised mists

All Gases are grouped according to their physical properties and details of their grouping can be found in either National or International codes of practice. Some examples of gas groups are shown on the next page.

Temperature Classification Table

Maximum Surface Temperature	US (NEC 505) IEC CENELEC	US (NEC 500)
450°C (842°F)	T1	T1
300°C (572°F)	T2	T2
280°C (536°F)		T2A
260°C (500°F)		T2B
230°C (446°F)		T2C
215°C (419°F)		T2D
200°C (392°F)	T3	T3
180°C ((356°F)		T3A
165°C (329°F)		T3B
160°C (320°F)		T3C
135°C (275°F)	T4	T4
120°C (248°F)		T4A
100°C (212°F)	T5	T5
85°C (185°F)	T6	T6

Unless otherwise specified on the rating plate it is assumed that the operating ambient temperature is in the range -20°C to + 40°C (-4°F to 104°F) in accordance with European Standards.

Gas Grouping For Electrical Apparatus (EN 50014)

Group	Gas
I (Mining)	Methane (firedamp)
IIA	Industrial methane, Propane, Petrol & most industrial gases.
II B	Ethylene, Town Gas & other industrial gases
II C	Hydrogen, Acetylene & Carbon Di-sulphide.

Ambient Temperature

The ambient temperature is the surrounding temperature of the environment in which the equipment is installed, whether indoors or outdoors.

For electrical equipment certified in Europe it is assumed that the ambient temperature in which the equipment may be operated is between -20°C and + 40°C (-4°F to 104°F). Some types of equipment are certified for operation outside this range and if so must be stated on the equipment label or certificate.

North American Standards

In North America all electrical installations are governed by the National Electric Code (NEC).

Electrical equipment used in ordinary, wet and hazardous (or classified) locations must be 'listed' by an accredited approval agency for use in the intended location. The hazardous locations include areas in which flammable, combustible or ignitable substances may occur in hazardous quantities. Article 501 Codes of the NEC use a different way of categorising the hazardous locations, which is by Class and Division, compared with the European and IEC standards, which have adopted the Zonal method. Electrical apparatus approved in North America for use in hazardous locations must be categorised with an Equipment Class and suitable for a specified Division and Gas Group.

Classifications are made in line with the type of combustible material as follows;

Class I – Flammable gases, vapours or mists

Class II – Combustible dusts

Class III – Ignitable fibres and flyings

In 1996 article 505 was introduced to the NEC which allowed Zonal classification of hazardous areas. This now means that products can be approved as follows:

Either,

Class, Division & Gas Group
For example:
Class 1, Division 2, A,B,C,D

or

Class, Zone & Gas Group
For example:
Class 1, Zone 2, IIA, IIB, IIC.

Although this code change permits the use of products that have a Zonal classification, in a similar way to European practice, the mixing of different forms of equipment approval across zones or divisions is not acceptable. For example products approved for Zone 1 do not necessarily meet the requirements of Division 1, which also encompasses Zone 0.

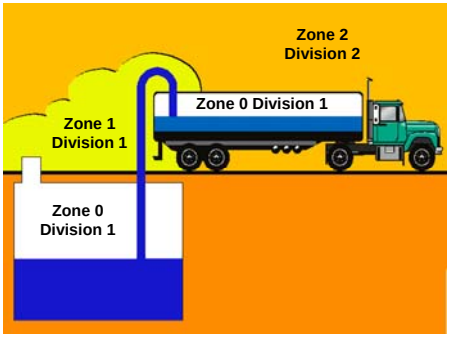

Although no direct equivalents exist between European/IEC and American codes of protection and Area Classification there are similarities and there is a developing acceptance of European/IEC methods in North America and vice versa. The following table shows the basic relationships between the North American and European Classifications.

Equivalent Division/Zone

NEC	European / IEC
Division 1	Zone 0
	Zone 1
Division 2	Zone 2

As can be seen from the above table, Division 1 covers both the European / IEC Zones 0 & 1. Therefore, care must be taken when using zone classified equipment in a Division 1 area to ensure the suitability of the protection employed.

Underwriters Laboratory (UL) and Factory Mutual (FM) are the two main certification bodies in North America and in some cases electrical equipment may also need to meet certain Marine Standards and be separately approved by the US Coast Guards, before it can be used e.g. on an offshore oil rig.

Ingress Protection

A major secondary protection parameter is the ingress protection of the electrical equipment. Moisture or dust, if allowed to come into contact with electrical circuits, could led to either sparking or physical breakdown of the components and interfere with the protection method being used. In some cases the IP rating forms part of the explosion protection method. All IP ratings for products in this catalogue have been carried out in accordance with EN 60529 (IEC 529) and have been witness tested by independent test laboratories.

IP Requirements to EN 60529(IEC 529)

—	Degree of Protection (Dust)	—	Degree of Protection (Water)
0	No Protection	0	No protection
1	Protection against ingress of large solid particles	1	Protection against ingress of vertically dripping water
2	Protection against ingress of medium solid particles	2	Protection against ingress of water dripping at an angle of 75 – 90 degrees
3	Protection against ingress of solid particles greater in thickness than 2.5mm	3	Protection against ingress of sprayed water
4	Protection against ingress of small foreign bodies greater in thickness than 1mm	4	Protection against ingress of splashed water
5	Protection against ingress of dust in an amount sufficient to interfere with enclosed equipment	5	Protection against ingress of water jets
6	Complete protection against ingress of dust	6	Protection against ingress of water in heavy seas
		7	Protection against effects temporary immersion
		8	Protection against effects of indefinite immersion

It will be noted that some products have both IP66 and IP67 ratings. This is because in some instances the IP66 requirement is more onerous than the IP 67 equivalent.

Both the SX range and BPG ranges have also been tested to the Shell/ERA deluge specification. This is one of the most onerous water ingress tests and was designed specifically for electrical equipment which would be subject to deluge conditions, e.g. ships decks and fire deluge areas.

ATEX Directive

The ATEX directive (94/9/EC) came into force in April 1994 and was enacted into UK law in March 1996. It became a mandatory requirement in July 2003. All of the products in this catalogue have an EC type examination certificate to the ATEX directive. ATEX covers both electrical and mechanical ignition hazards.

Apparatus are divided into Equipment groups (I for mining and II non-mining), source of ignition Gas (G) and Dust (D) and Categories 1, 2 and 3. The Categories provide respectively, very high, high and normal levels of protection against ignition. The Categories deliver the level of protection which is currently obtained by applying the existing protection techniques (Ex 'd', Ex 'e' etc) and they also take into account other protection concepts proposed by manufacturers and considered by the notified (certification) bodies who produce EC type examination (ATEX) certificates.

The Categories in practice are equated to suitability for Zones. The actual category of apparatus specified for a Zone depends on the overall risk assessment for a Zone. The Zoning considers only the probability of the existence of an explosive atmosphere. It does not consider the consequential effects of an ignition taking place. Apparatus are marked with the grouping and Category in addition to the marking required by the individual protection standards.

All ABTECH products are certified for use in Group II industrial applications, most are certified for both Gas (G) and Dust (D) hazards and are suitable for classification in Categories 2 and 3. This means that they are or will generally be suitable for use in Zone 1 and Zone 2 areas. Guidance is given by the codes of practice such as EN 60079-10 and EN 60079-14 etc. These codes of practice provide the user with guidance in selecting apparatus to obtain the degree of safety that is required for the particular hazardous area application.

An EC type examination by a notified body is required for Category 1 and 2 equipment but not for Category 3 where the certification is supplied by the manufacturer.

Junction Boxes in Hazardous Areas

Junction boxes and terminal enclosures for use in hazardous areas mainly contain non incendive devices i.e. terminals. For Ex 'e' certified apparatus there are two main criteria when specifying the apparatus.

1. Are the components acceptable for use in the enclosure i.e. non sparking, and
2. Will any components or wiring be hotter than the temperature classification of the apparatus allows.

To comply with the first requirement, only terminals or other components which are specifically allowed for in the certificate of compliance, and post July 2003 only ATEX certified components may be fitted (apparatus constructed prior to July 2003 need not meet this requirement).

To ensure compliance with the second criteria for safe use, all low voltage ABTECH enclosures are certified using the dissipated power method.

Through testing it has been determined what the maximum power dissipation can be from the components and wiring inside each enclosure size to ensure that the temperature of any of the components does not exceed the temperature classification of the apparatus.

This figure is shown for each of the products throughout the catalogue and can be found on each of the product certificates.

By knowing the total current through the enclosure and the total resistance of the terminals and wiring, using Ohms Law it is possible to calculate the dissipation power of the circuit.

Power Dissipation;

$$\mathbf{P}\ (\text{Watts}) = \mathbf{I}^2\ (\text{Amps}) \times \mathbf{R}\ (\text{Ohms})$$

Where I is the total current through the enclosure, and R is the total resistance of the terminals and conductor contained within the enclosure.

Where I is the total current through the enclosure, and R is the total resistance of the terminals and conductor contained within the enclosure.

The resistance of the terminals can be sought from the terminal manufacturers and the resistance of the conductors is available in reference books or from the cable manufacturers.

Alternatively, the ABTECH Enclosure Calculator software will calculate this automatically for a given combination of enclosure and terminals.

For high current applications the terminal resistance can vary depending on the cable size, cable quantity, crimping method for cable lugs and the actual current flow. Correct installation is essential in order to limit the overall temperature rise and the maximum operating temperature of the terminals.

In all Ex certified enclosures it is important that an earth facility is provided. In plastic enclosures this may be by means of an internal/external earth stud or by an earth terminal fitted inside. Additional earthing for cable glands can be provided by an earth continuity plate fitted inside the enclosure wall.
Plastic enclosures carry a risk of static discharge which could lead to a spark being produced if rubbed with a dry cloth. Plastic enclosures should only ever be cleaned using a damp cloth. Optionally, plastic enclosures with a graphite filling are available which reduces this risk.

For metallic enclosures the earth facility must earth the enclosure body and can be provided by earth terminals connected to the body through the terminal mounting rail and/or by means of an internal/external earth stud.

Cable Glands for use In Hazardous Areas

Cable glands used in enclosures intended for use in a hazardous area must meet with the same criteria as the enclosure to which they are connected. For example, cable glands used on an EEx'e' enclosure must meet the requirements for the enclosures of the EEx'e' standard i.e. must be capable of withstanding a 7Nm impact and capable of maintaining an ingress protection of at least IP54.

If a plastic or non-metallic cable gland is used it must be capable of passing these tests after having undergone an accelerated conditioning period. Most reputable cable gland manufacturers have their products approved by a suitably notified body and will carry the certification markings on the body of the gland.

Cable glands are a very important element in the protection of electrical equipment and should not be underestimated. There are a vast array of different cables in use today and it is important that advice is sought from a cable gland manufacturer regarding selection.

Suggested Clearance Dimensions for Common Gland Sizes

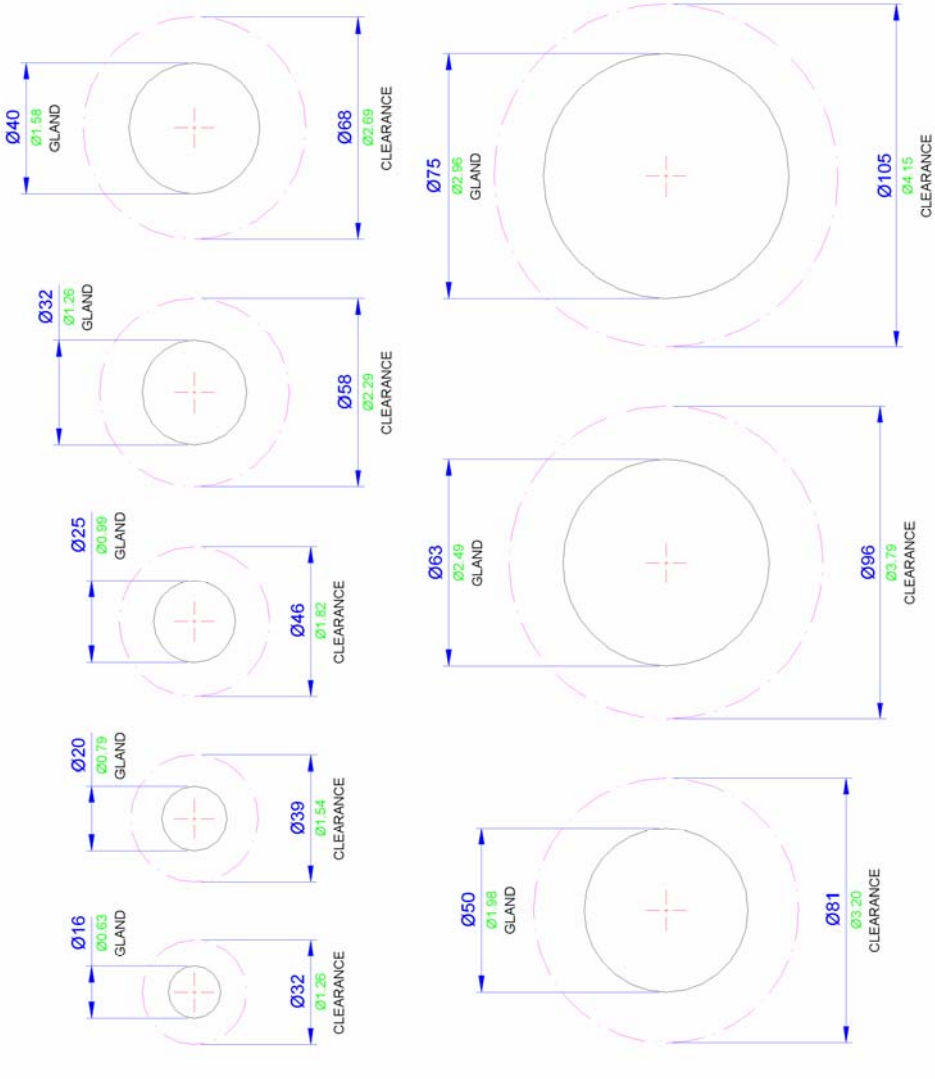

Abtech Major Project List

Agbami Discovery Well, Niger Delta, Nigeria
Alba Phase II, North Sea Northern, United Kingdom
Alvheim North Sea Northern, Norway
Azeri-Chirag-Gunashli (ACG) Oil Field, Caspian Sea, Azerbaijan

Balder, North Sea Northern, Norway
Banff, North Sea Central, United Kingdom
Barracuda and Caratinga Fields, Campos Basin, Brazil
Bijupira and Salema Fields, Campos Basin, Brazil
Bonga Deepwater Project, Niger Delta, Nigeria
Britannia, North Sea Central, United Kingdom
Bruce , North Sea, United Kingdom
Bunga Orchid-A, Malaysia
Buzzard Field North Sea Central, United Kingdom

Caister Murdoch Phase 3, North Sea Southern, United Kingdom
Captain, North Sea Central, United Kingdom
Chermingat-A, Malaysia
Chinguetti Oil Field, Mauritania
Clair Field, Shetlands, United Kingdom
Corrib Gas Field, Republic of Ireland
Curlew, North Sea Central, United Kingdom

Dalia Field Development of Block 17, Angola
Dunbar Phase II, North Sea Central, United Kingdom

E11PB, Sarawak
Easington Catchment Area (ECA), North Sea Southern, United Kingdom
East Belumut, Malaysia
Eastern Trough Area Project (ETAP), North Sea Central, United Kingdom
Ekofisk II, North Sea Central, Norway
Elgin Franklin, North Sea Central, United Kingdom
Erskine, North Sea Central, United Kingdom
Espadarte, Campos Basin, Brazil

F23VLAP, Sarawak
Foinaven Oil Field, United Kingdom

Gannet, North Sea Central, United Kingdom
Girassol, Luanda, Angola
Goldeneye Gas Platform, North Sea Northern, United Kingdom
Greater Plutonio, Block 18, Deepwater Drillship Pride, Angola
Gullfaks, North Sea Northern, Norway

Hanze F2A, Dutch North Sea, Netherlands
Hibernia, Jeanne d'Arc Basin, Canada

Jade Oil and Gas Platform, North Sea Central, United Kingdom
Janice, North Sea Central, United Kingdom
Jotun, North Sea Northern, Norway

K5F Gas Field, Netherlands
Kashagan, Caspian Sea, Kazakhstan
Kikeh, Malaysia
Kizomba Deepwater Project, Angola
Kristin Deepwater Project, Norwegian Sea, Norway

Leadon, North Sea Northern, United Kingdom
Liverpool Bay Oil and Gas Fields, United Kingdom
Lukoil's Kravtsovskoye (D-6) Oil Field Ice-Resistant Stationary Platform, Russia

Abtech Major Project List cont.

MacCulloch, North Sea Central, United Kingdom
Mad Dog Drilling Unit Field Gulf of Mexico, USA
Magnolia Field, Gulf of Mexico, USA
Magnus EOR, Shetlands, United Kingdom
Marco Polo Field Gulf of Mexico, USA
Marlim Oil Field, Campos Basin, Brazil
Marlim Sul, Campos Basin, Brazil
Mars, Gulf of Mexico, USA
Matterhorn Field, Gulf of Mexico, USA

Okume Complex, Equatorial Guinea
Oseberg Sør, North Sea Northern, Norway

Pierce, North Sea Central, United Kingdom
Prirazlomnoye Oilfield - Barents Sea, Russia
Puteri, Malaysia

R Block Development, North Sea Central, United Kingdom
Rivers Fields, East Irish Sea, United Kingdom
Roncador, Campos Basin, Brazil
Ross, North Sea Central, United Kingdom
Ruby FPSO, Malaysia

Sable Offshore Energy Project, Sable Island, Canada
Sakhalin II, Sea of Okhotsk, Russia
Sanha / Bomboco, LPG FPSO Floating Production Facility, Angola
Scarab and Saffron Gas Fields, Eastern Mediterranean, Egypt
Schiehallion Oil Field, United Kingdom
Serampang-A, Malaysia
Shah Deniz South Caspian Sea, Azerbaijan
Shearwater, North Sea Central, United Kingdom
Siri, North Sea Northern, Denmark
Snøhvit Gas Field, Barents Sea, Norway
Snorre, North Sea Central, Norway
South Arne, Danish North Sea, Denmark
South Pars, Qatar North Field, Iran
St. Joseph, Sarawak
Sumandak Selatan, Malaysia

Terra Nova, Jeanne d'Arc Basin, Canada
Thunder Horse Field, Gulf of Mexico, USA
Triton, North Sea Central, United Kingdom
Troika, Gulf of Mexico, USA
Troll West, North Sea Northern, Norway
Typhoon, Gulf of Mexico, USA

Ursa, Gulf of Mexico, USA

Valhall Flank Water Injection Platform, Norwegian North Sea, Norway
Viking B, North Sea Southern, United Kingdom

West Patrica, Malaysia
White Rose Oil and Gas Field, Jeanne d'Arc Basin, Canada

Xikomba Oil Field Deepwater Development, Angola

Yoho Oil Field, Nigeria

ABTECH
www.abtech.eu
CE
0518
A.B.CONTROLS AND TECHNOLOGY
SHEFFIELD S9 2UA, ENGLAND
TYPE SX
RATING WATTS
SERIAL No. 20
II 2 G D - IP6 - T °C
EEx e II Tamb
SIRA99ATEX3171
WARNING!!!
LIVE TERMINALS ISOLATE ELSEWHERE
BEFORE OPENING ENCLOSURE

Index

A

AAG-100	212
AAG-2016	212
AAG-20a	212
AAG-20b	212
AAG-20c	212
AAG-20d	212
AAG-25a	212
AAG-32	212
AAG-40	212
AAG-50	212
AAG-63	212
AAG-75	212
AAG-80	212
AAG-90	212
ABAD-M2016	214
ABAD-M2516	214
ABAD-M2520	214
ABAD-M3216	214
ABAD-M3220	214
ABAD-M3225	214
ABAD-M4020	214
ABAD-M4025	214
ABAD-M4032	214
ABAD-M5025	214
ABAD-M5032	214
ABAD-M5040	214
ABAD-M6332	214
ABAD-M6340	214
ABAD-M6350	214
ABAD-M7540	214
ABAD-M7550	214
ABAD-M7563	214
ABAD-M8550	214
ABAD-M8563	214
ABAD-M8575	214
ABAD-N1121	214
ABAD-N1141	214
ABAD-N12114	214
ABAD-N134	214
ABAD-N1434	214
ABAD-N2112	214
ABAD-N2114	214
ABAD-N212112	214
ABAD-N2122	214
ABAD-N3112	214
ABAD-N32	214
ABAD-N3212	214
ABAD-N3412	214
ABAD-N4212	214
ABAD-N43	214
ABET-M100	219
ABET-M16	219
ABET-M20	219
ABET-M25	219
ABET-M32	219
ABET-M40	219
ABET-M50	219
ABET-M63	219
ABET-M75	219
ABET-M80	219
ABET-M85	219
ABET-M90	219
ABET-N1	219
ABET-N112	219
ABET-N114	219
ABET-N12	219
ABET-N2	219
ABET-N212	219
ABET-N312	219
ABET-N34	219
ABET-N34	219
ABET-N4	219
ABLN-M100	219
ABLN-M16	219
ABLN-M20	219

ABLN-M25	219
ABLN-M32	219
ABLN-M40	219
ABLN-M50	219
ABLN-M63	219
ABLN-M75	219
ABLN-M80	219
ABLN-M90	219
ABLN-N1	219
ABLN-N112	219
ABLN-N114	219
ABLN-N12	219
ABLN-N2	219
ABLN-N212	219
ABLN-N312	219
ABLN-N34	219
ABLN-N34	219
ABLN-N4	219
ABRE-M1625	216
ABRE-M1632	216
ABRE-M2025	216
ABRE-M2032	216
ABRE-M2040	216
ABRE-M2532	216
ABRE-M2540	216
ABRE-M2550	216
ABRE-M3240	216
ABRE-M3250	216
ABRE-M3263	216
ABRE-M4050	216
ABRE-M4063	216
ABRE-M4075	216
ABRE-M5063	216
ABRE-M5075	216
ABRE-M5085	216
ABRE-M6375	216
ABRE-M6385	216
ABRE-M7585	216
ABRE-N1112	216
ABRE-N1114	216
ABRE-N1122	216
ABRE-N112212	216
ABRE-N1123	216
ABRE-N114112	216
ABRE-N11412	216
ABRE-N1142	216
ABRE-N12	216
ABRE-N121	216
ABRE-N12114	216
ABRE-N1234	216
ABRE-N2123	216
ABRE-N2124	216
ABRE-N2212	216
ABRE-N23	216
ABRE-N24	216
ABRE-N34	216
ABRE-N341	216
ABRE-N34112	216
ABRE-N34114	216
ABSD-A20a	220
ABSD-A20d	220
ABSD-A25	220
ABSD-A32	220
ABSD-A40	220
ABSD-A50	220
ABSD-A63	220
ABSD-A75	220
ABSD-B16	220
ABSD-B20a	220
ABSD-B20b	220
ABSD-B25	220
ABSD-B32	220
ABSD-B40	220
ABSD-B50	220
ABSD-B63	220
ABSD-B75	220

ABSD-B80	220
ABSD-B90	220
ABSP H-M16	218
ABSP H-M20	218
ABSP H-M25	218
ABSP H-M32	218
ABSP H-M40	218
ABSP H-M50	218
ABSP H-M63	218
ABSP H-M75	218
ABSP H-M85	218
ABSP H-N1	217
ABSP H-N112	217
ABSP H-N114	217
ABSP H-N12	217
ABSP H-N2	217
ABSP H-N212	217
ABSP H-N3	217
ABSP H-N34	217
ABSP H-N4	217
ABSP RH-M16	218
ABSP RH-M20	218
ABSP RH-M25	218
ABSP RH-M32	218
ABSP RH-M40	218
ABSP RH-M50	218
ABSP RH-M63	218
ABSP RH-M75	218
ABSP RH-M85	218
ABSP RH-N1	217
ABSP RH-N112	217
ABSP RH-N114	217
ABSP RH-N2	217
ABSP RH-N212	217
ABSP RH-N3	217
ABSP RH-N34	217
ABSP RH-N4	217
ABSSW-M100	219
ABSSW-M16	219
ABSSW-M20	219
ABSSW-M25	219
ABSSW-M32	219
ABSSW-M40	219
ABSSW-M50	219
ABSSW-M63	219
ABSSW-M75	219
ABSSW-M80	219
ABSSW-M85	219
ABSSW-M90	219
ABSSW-N1	219
ABSSW-N112	219
ABSSW-N114	219
ABSSW-N12	219
ABSSW-N2	219
ABSSW-N212	219
ABSSW-N312	219
ABSSW-N34	219
ABSSW-N34	219
ABSSW-N4	219
ABSW-M100	220
ABSW-M16	220
ABSW-M20	220
ABSW-M25	220
ABSW-M32	220
ABSW-M40	220
ABSW-M50	220
ABSW-M63	220
ABSW-M75	220
ABSW-M80	220
ABSW-M85	220
ABSW-M90	220
ABSW-N1	220
ABSW-N112	220
ABSW-N114	220
ABSW-N12	220
ABSW-N2	220

ABSW-N212 220
ABSW-N312 220
ABSW-N34 220
ABSW-N34 220
ABSW-N4 220
ASG-M16a 210
ASG-M16b 210
ASG-M20a 210
ASG-M20b 210
ASG-M20c 210
ASG-M25 210
ASG-M32a 210
ASG-M32b 210
ASG-M40 210
ASG-M50 210
ASG-M63a 210
ASG-M63b 210
ASG-M75 210
ASG-M80 210
ASG-M90 210

B

BPG1 47
BPG10 67
BPG11 69
BPG12 71
BPG13 73
BPG13.5 75
BPG14 77
BPG15 79
BPG4 53
BPG4.5 55
BPG5 57
BPG6 59
BPG7 61
BPG8 63
BPG9 65
BPGA120 84
BPGA125 85
BPGA160 86
BPGC1 47
BPGC10 67
BPGC11 69
BPGC12 71
BPGC13 73
BPGC13.5 75
BPGC14 77
BPGC15 79
BPGC2 49
BPGC3 51
BPGC4 53
BPGC4.5 55
BPGC5 57
BPGC6 59
BPGC7 61
BPGC8 63
BPGC9 65

D

DPJB1 137
DPJB11 137
DPJB2 137
DPJB3 137
DPJB5 137
DPJB7 137
DPJB9 137

G

GRN8 197

H

HVJBx3 (0-2) 139
HVJBx3 (0-3) 139
HVJBx3 (1-1) 139
HVJBx3 (1-2) 139
HVJBx3 (1-3) 139
HVJBx3 (2-0) 139
HVJBx3 (2-1) 139
HVJBx3 (2-2) 139
HVJBx3 (2-3) 139

HVJBx3 (3-0)	139
HVJBx3 (3-1)	139
HVJBx3 (3-2)	139
HVJBx3 (3-3)	139
HVJBx4 (0-2)	139
HVJBx4 (0-3)	139
HVJBx4 (1-1)	139
HVJBx4 (1-2)	139
HVJBx4 (1-3)	139
HVJBx4 (2-0)	139
HVJBx4 (2-1)	139
HVJBx4 (2-2)	139
HVJBx4 (2-3)	139
HVJBx4 (3-0)	139
HVJBx4 (3-1)	139
HVJBx4 (3-2)	139
HVJBx4 (3-3)	139
L	
LR52(200)	141
LR52(300)	141
LR73(200)	141
LR73(300)	141
M	
MJB5	135
MJB5/3	135
MJB6	135
MJB6/3	135
MJB7	135
MJB7/3	135
MJB8	135
MJB8/3	135
MSX0.140	19
MSX0.200	19
MSX0.5.140	21
MSX0.5.200	21
MSX1.140	23
MSX1.200	23
MSX1.5.140	25
MSX1.5.200	25
MSX1.5.300	25
MSX2.140	27
MSX2.200	27
MSX2.300	27
MSX3.140	29
MSX3.200	29
MSX3.300	29
MSX4.140	31
MSX4.200	31
MSX4.300	31
MSX45	13
MSX5.140	33
MSX5.200	33
MSX5.300	33
MSX6.140	35
MSX6.200	35
MSX6.300	35
MSX64	15
MSX66	17
MSX7.140	37
MSX7.200	37
MSX7.300	37
MSX8.140	39
MSX8.200	39
MSX8.300	39
S	
SX0.140	19
SX0.200	19
SX0.5.140	21
SX0.5.200	21
SX1.140	23
SX1.200	23
SX1.5.140	25
SX1.5.200	25
SX1.5.300	25
SX2.140	27
SX2.200	27

SX2.300	27
SX3.140	29
SX3.200	29
SX3.300	29
SX4.140	31
SX4.200	31
SX4.300	31
SX45	13
SX5.140	33
SX5.200	33
SX5.300	33
SX6.140	35
SX6.200	35
SX6.300	35
SX64	15
SX66	17
SX7.140	37
SX7.200	37
SX7.300	37
SX8.140	39
SX8.200	39
SX8.300	39
Z	
ZAG1	93
ZAG10	113
ZAG10R	113
ZAG11	117
ZAG11R	117
ZAG12	119
ZAG12R	119
ZAG13	121
ZAG13R	121
ZAG14	123
ZAG14R	123
ZAG15	125
ZAG15R	125
ZAG16	127
ZAG16R	127
ZAG1R	93
ZAG2	95
ZAG21	129
ZAG21R	129
ZAG2R	95
ZAG3	97
ZAG3R	97
ZAG4	99
ZAG4R	99
ZAG5	101
ZAG5R	101
ZAG6	103
ZAG6R	103
ZAG7	105
ZAG7R	105
ZAG8	107
ZAG8R	107
ZAG9	109
ZAG9R	109
ZP1	157
ZP10	175
ZP10ABS	175
ZP10T	175
ZP11	177
ZP11ABS	177
ZP11T	177
ZP12	179
ZP12ABS	179
ZP12T	179
ZP13	181
ZP13ABS	181
ZP13T	181
ZP14	183
ZP14ABS	183
ZP14T	183
ZP15	185
ZP15ABS	185
ZP15T	185

ZP16	187
ZP16ABS	187
ZP16T	187
ZP17	189
ZP17ABS	189
ZP17T	189
ZP18	191
ZP18ABS	191
ZP18T	191
ZP19	193
ZP19ABS	193
ZP19T	193
ZP1ABS	157
ZP1T	157
ZP2	159
ZP2ABS	159
ZP2T	159
ZP3	161
ZP3ABS	161
ZP3T	161
ZP4	163
ZP4ABS	163
ZP4T	163
ZP5	165
ZP5ABS	165
ZP5T	165
ZP6	167
ZP6ABS	167
ZP6T	167
ZP7	169
ZP7ABS	169
ZP7T	169
ZP8	171
ZP8ABS	171
ZP8T	171
ZP9	173
ZP9ABS	173
ZP9T	173

www.abtech.eu